FIELD MAINTENANCE PRINT SET

TABLE OF CONTENTS

UNIT VARIATIONS COVERED BY THIS PRINT SET
VT1ØØ-AA
VT1ØØ-AB
VT1ØØ-NA
VT1ØØ-NB
VT1ØØ-WA
VT1ØØ-WB
VT1ØØ-WC
VT1ØØ-WD
VT1ØØ-WE
VT1ØØ-WF
VT1ØØ-WG
VT1ØØ-WH
VT1ØØ-WJ
VT1ØØ-WK
VT1ØØ-WY
VT1ØØ-WZ
VT1ØØ-LA
VT1ØØ-LB

VT1ØØ-Ø

Field Maintenance Print Set

Digital Equipment Corporation

PRINT SET ORDER NO.
MP00633

REVISIONS		
REV	CHG. NO.	DATE
A	VT100PN003	2-19-79
B	VT100ML028	12-11-79
C	VT100ML031	3-14-80

DRB 124

USED ON OPTION/MODEL	

SHEET 1 OF 1

DRN. B. BLODGETT	DATE 27 OCT 77	TITLE: VT1ØØ UNIT ASSY. (TABLE OF CONTENTS)
CHK'D D. HEALY	DATE 10 APR78	
PROJ. ENG.	DATE 6-26-78	
FIELD SERV. for JOHN ZALESKA	DATE 12 JUL 78	

digital

SIZE	CODE	NUMBER	REV.
B	TC	VT1ØØ-Ø-1	C

DIST.

SIZE B | CODE TC | NUMBER VT1ØØ-Ø-1 | REV. C

ML

NOTE: FOR LEGEND & LABEL INFORMATION REFER TO SHEET #2.

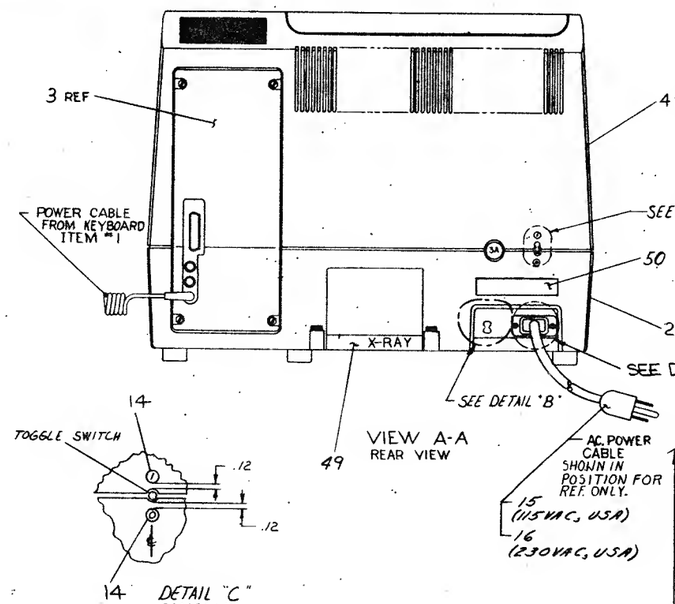

DETAIL "C"
SCALE: 1/1

DETAIL "B"
OPTIONAL INPUT VOLTAGE REQUIREMENTS
SEE NOTE 1

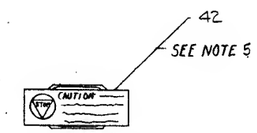

DETAIL "E"
SCALE 1/1

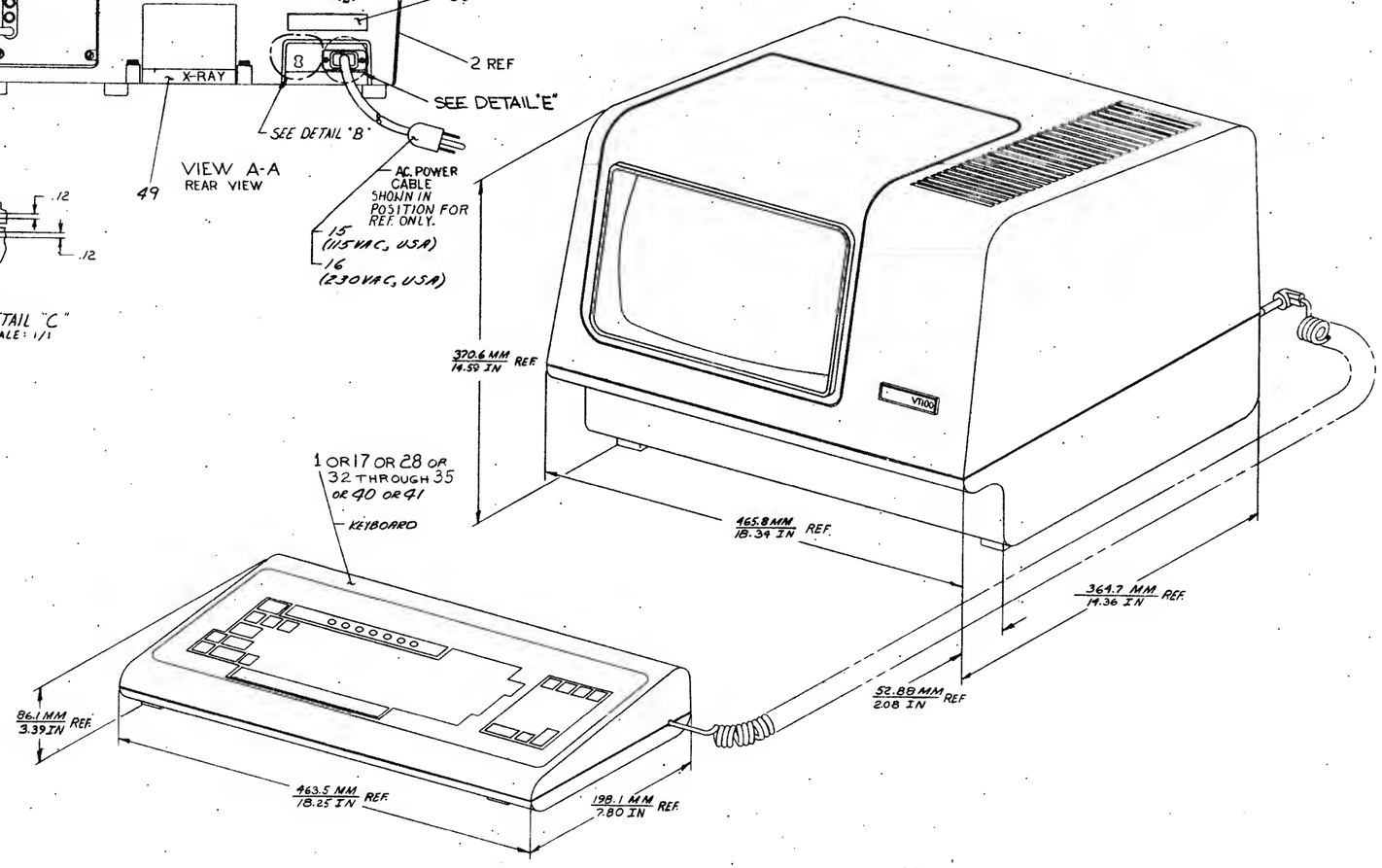

NOTE:

1. ALL VT100 UNIVERSAL TERMINALS ARE SHIPPED SET UP FOR 100-130 VAC, 60 HZ OPERATION. TERMINAL IS SWITCH SETABLE FOR 220-240 VAC, 50/60 HZ OPERATION BY SLIDING ACTUATOR TO POSITION SHOWN IN DETAIL "B".
2. PACKAGING: WHEN SHIPPED, MATERIAL SHALL BE ADEQUATELY PROTECTED FROM HANDLING AND SHIPPING DAMAGE USING DIGITAL PACKAGING INSTRUCTION A-SP-3700324-0-0.
3. TERMINAL IS SUPPLIED WITHOUT INTERFACE CABLES. ORDER INTERFACE CABLES FOR OPTIONS VT100-AA THRU VT100-DC
4. FLYBACK TRANSFORMER FOR ALTERNATE MONITOR, BALL BROTHERS 30-14590-0-0 IS MOUNTED TO CHASSIS USING 9009967-00 SCREWS (QTY 2), AND CRT IS GROUNDED USING C-MD-7419836-0-0 RETAINERS (QTY 2)
5. ITEM #42 IS TO BE INSTALLED AFTER TEST
6. SCREWS, ITEM #31 FOR SHIPPING USE ONLY.

CAUTION: OFF SHEET PARTS LIST EXISTS. SEE K-PL-VT100-0-DBP

REV.	CHANGE NO.	REVISIONS
K	K-VT100-HL-031	J. BITTO 12 Nov 78
B	K-VT100-HL-033	J. BITTO 12 Nov 78
C	K-VT100-PN003	L. KING 6-9-79
D	K-VT100-PN011	J. BITTO 6-9-79
E	K-VT100-PN012	J. BITTO CANCELED
F	K-VT100-PN017	J. BITTO
H	K-VT100-PN020	J. BITTO
J	K-VT100-PN021	J. BITTO 2 Jan 79
K	K-VT100-PN022	J. BITTO 2 Jan 79
L	K-VT100-HL-026	J. BITTO 11-7-77
M	K-VT100-HL-029	C. JAMES 1-16-80
N	K-VT100-HL-030	J. BITTO 2-8-79
P	K-VT100-HL-031	C. JAMES 3/1/80
R	K-VT100-HL-032	J. DEMARINIS 12 Mar 81
T	K-VT100-HL-034	J. DEMARINIS 12 Mar 81
U	K-VT100-HL-035	J. DEMARINIS 18-2-81
V	K-VT100-HL-036	J. DEMARINIS 12 Mar 81
W	K-VT100-HL-038	J. DEMARINIS 18 Mar 81

DESCRIPTION	DRG./PART NO.	ITEM NO.
UNLESS OTHERWISE SPECIFIED DIMENSIONS ARE IN INCHES		
QUANTITY & VARIATION		
THIRD ANGLE PROJECTION	DRN	FIRST USED ON VT100
	CHK'D	TITLE VT100 UNIT ASSY
	ENG	
	PROJ. ENGR.	
	PROG.	
DO NOT SCALE DWG.	NEXT HIGHER ASSY.	
MATERIAL SEE PARTS LIST	B-VD-VT100-0	
	SCALE 1/2	
	SHEET 1 OF 3	SIZE E CODE IDENT NO. 14 NUMBER VT100-0-0 REV W

VT100-0-0-0 W

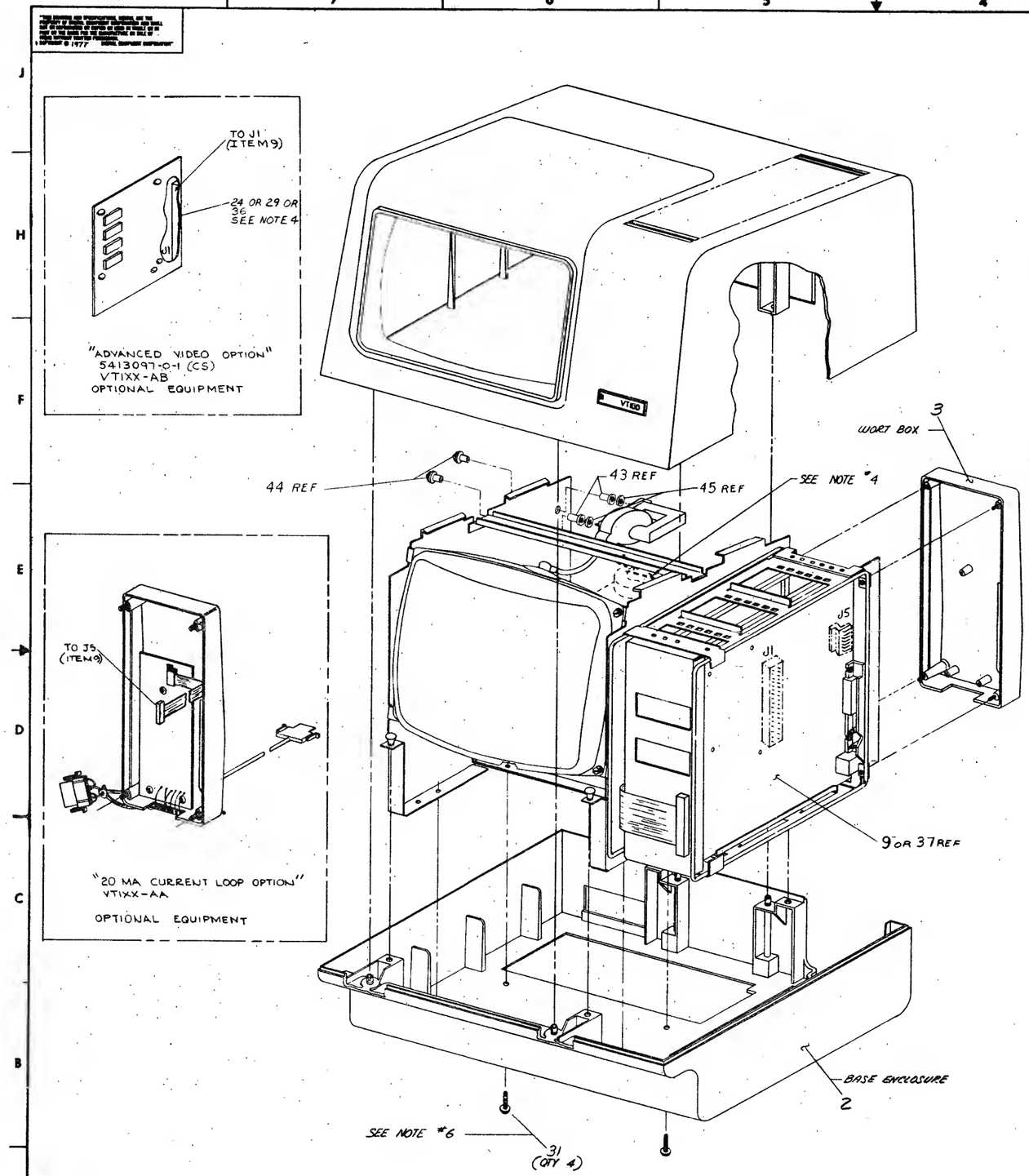

LEGEND		SERIAL LABEL INFORMATION					
MODEL NUMBER	VARIATIONS	VOLTS	AMPS	PH	HZ	WATTS	WIRES
VT100 -AA	DBL KEYBD EIA 115V LINE CORD USA PLUG	120/220 240	2.5 / 1.3		50/60	300 MAX	
VT100 -AB	DBL KEYBD EIA 230V LINE CORD 20A PLUG	⇑	⇑		⇑	⇑	
VT100 -NA	VT100-AA WITH DEC FORM KEY CAPS	↑	↑		↑	↑	
VT100 -NB	VT100-AB WITH DEC FORM KEY CAPS	↑	↑		↑	↑	
VT100 -WA	VT100-AA WITH WORD PROCESSING KEYCAPS	↑	↑		↑	↑	
VT100 -WB	VT100-AB WITH WORD PROCESSING KEYCAPS	↑	↑		↑	↑	
VT100 -WC	VT100 WITH AVO, FR. CANADIAN WP KEYCAPS. FOREIGN LANGUAGE ROMS, & 120V PLUG	↑	↑		↑	↑	
VT100 -WD	VT100 WITH AVO, FR. CANADIAN WP KEYCAPS, FOREIGN LANGUAGE ROMS, & 230V 20A PLUG.	↑	↑		↑	↑	
VT100 -WE	VT100 WITH AVO, FRENCH WP KEYCAPS, FOREIGN LANGUAGE ROMS AND 120V PLUG.	↑	↑		↑	↑	
VT100 -WF	VT100 WITH AVO, FRENCH WP KEYCAPS, FOREIGN LANGUAGE ROMS, & 230V 20A PLUG.	↑	↑		↑	↑	
VT100 -WG	VT100 WITH AVO, DUTCH KEYCAPS, FOREIGN LANGUAGE ROMS, AND 120V PLUG.	↑	↑		↑	↑	
VT100 -WH	VT100 WITH AVO, DUTCH KEYCAPS, FOREIGN LANGUAGE ROMS, & 230V 20A PLUG.	↑	↑		↑	↑	
VT100 -WJ	VT100 WITH AVO, GERMAN KEYCAPS, FOREIGN LANGUAGE ROMS, & 120 V PLUG.	↑	↑		↑	↑	
VT100 -WK	VT100 WITH AVO, GERMAN KEYCAPS, FOREIGN LANGUAGE ROMS, & 230V 20A PLUG.	↑	↑		↑	↑	
VT100 -WY	VT100 WITH AVO, WP KEYCAPS, FOREIGN LANGUAGE ROMS, AND 120 V PLUG.	↑	↑		↑	↑	
VT100 -WZ	VT100 WITH AVO, WP KEYCAPS, FOREIGN LANGUAGE ROMS, AND 230V 20A PLUG.	↑	↑		↑	↑	
VT100 -LA	VT100-AA WITH P40 TUBE AND BONDED FACE PLATE	↑	↑		↑	↑	
VT100 -LB	VT100-AB WITH P40 TUBE AND BONDED FACE PLATE	↑	↑		↑	↑	
VT100 -PA	(PRIVATE BRAND) VT100-AA EXCEPT DARK GREY TRIM.120V	↑	↑		↑	↑	
VT100 -PB	(PRIVATE BRAND) VT100-AB EXCEPT DARK GREY TRIM.220/240V	↑	↑		↑	↑	
VT100 -PC	(PRIVATE BRAND) VT100-PA WITHOUT ELECTRONICS 120V	↑	↑		↑	↑	
VT100 -PD	(PRIVATE BRAND) VT100-PB WITHOUT ELECTRONICS 240V	↑	↑		↑	↑	
VT100 -PE	(PRIVATE BRAND) VT100-PA WITHOUT ELECT. & NO KYBD 120V	↓	↓		↓	↓	
VT100 -PF	(PRIVATE BRAND) VT100-PB WITHOUT ELECT. & NO KYBD 240V	120/220 240	2.5 / 1.3		50/60	300 MAX	

QUANTITY & VARIATION	DESCRIPTION	DWG./PART NO.	APPR. NO.
	UNLESS OTHERWISE SPECIFIED DIMENSIONS ARE IN INCHES		
	ANGLES ±0° 30'	CLASS OF FITS	NOMINAL DIMENSION RANGE INCHES
	SURFACE QUALITY IN MICROINCHES	SHOCK ONLY MEDIUM / PREFERRED	0-12 / 12-24 / 24-48 / 48-96 / 96-192
			0.005 / 0.005 / 0.006 / 0.006 / 0.01
			0.012 / 0.012 / 0.015 / 0.01 / 0.01

THIRD ANGLE PROJECTION

REMOVE BURRS AND BREAK SHARP CORNERS

DO NOT SCALE DWG

MATERIAL SEE PARTS LIST

FINISH

DRN. [illegible] Sept 77
CHK'D [illegible] 11-16-77
ENG. [illegible] Feb 77
PROJ. ENG. [illegible] 11-16-77
PROD. [illegible] 12-10-78

NEXT HIGHER ASSY. B-DD-VT100-0

SCALE 1/2 SHEET 2 OF 3

FIRST USED ON VT100

TITLE VT100 UNIT ASSY

SIZE E CODE UA DRAWING VT100-0-0 REV. W

DD-0000

VT100-0-0 W 2-2-78

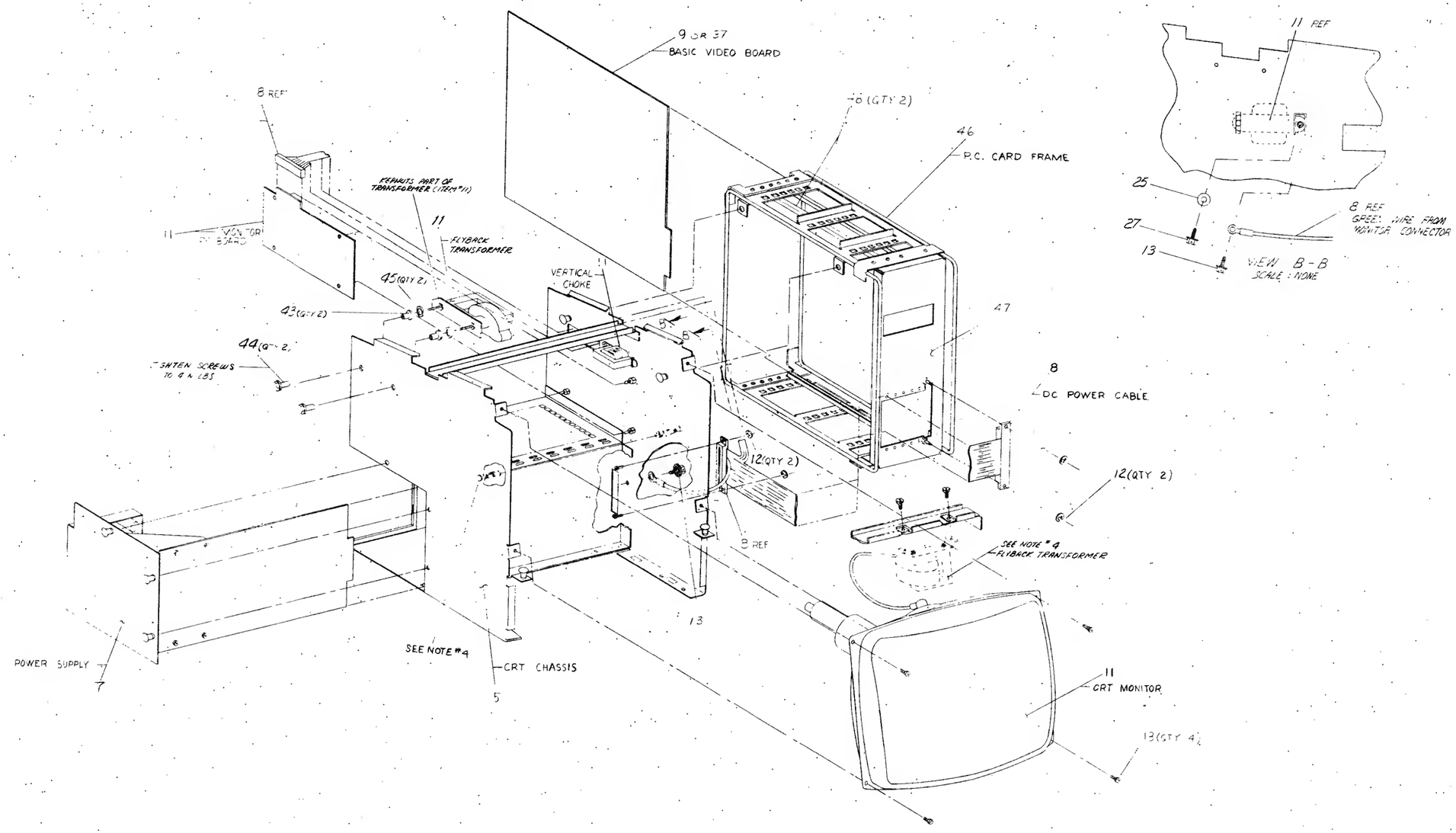

QUANTITY & VARIATION	DESCRIPTION	DWG PART NO	ITEM NO.
	UNLESS OTHERWISE SPECIFIED DIMENSIONS ARE IN INCHES		

ANGLES ±0° 30'	CLASS OF ACCURACY (CHECK ONE)	NOMINAL DIMENSION RANGE INCHES					
SURFACE QUALITY IN MICROINCHES		OVER 0 TO 6	OVER 6 TO 12	OVER 12 TO 48	OVER 48 TO 120	OVER 120 TO 48.0	OVER 48.0 TO 80.0
0.5	MEDIUM	±.005	±.010	±.017	±.030	±.030	±.04
	PREFERRED	±0.2	±.010	±.015	±.04	±.060	±0.1

THIRD ANGLE PROJECTION

REMOVE BURRS AND BREAK SHARP CORNERS

DO NOT SCALE DWG

MATERIAL: SEE PARTS LIST

FINISH: — / —

DRN: [illegible] 8 Jun 77
CHK'D: [illegible]
ENG: [illegible] 8 Jun 77
PROJ. ENG: [illegible] 8 Jun 77
PROD: [illegible] 8 Jun 77
NEXT HIGHER ASSY.: B-DD-VT100-0

FIRST USED ON: VT100*

TITLE: VT100 UNIT ASSY

SCALE: 1/2

SHEET 3 OF 3

SIZE: E | CODE: UA | NUMBER: VT100-0-0 | REV. W

DIST.

REVISIONS: REV. | CHANGE NO. | CHK.

AUTOMATED BY PRTLST.3P(44)

P A R T S L I S T

LINE	ITEM	DOCUMENT NUMBER	PART NUMBER	DESCRIPTION	QUANTITY PER VARIATION AA	AB	NA	NB	WA	WB	WC	WD	WE	WF	WG	WH
1	1	D-UA-7014653-0-0	7014653-00	KEYBOARD ASSY	1	1	-	-	-	-	-	-	-	-	-	-
2	2	E-IA-70149B0-0-0	70149B0-00	BASE ASSY ENCLOSURE	1	1	1	1	1	1	1	1	1	1	1	1
3	3	D-IA-7014976-0-0	7014976-00	WORT BOX ASSY	1	1	1	1	1	1	1	1	1	1	1	1
4	4	D-IA-7014974-0-0	7014974-00	ENCLOSURE, CRT TOP ASSY	1	1	1	1	1	1	1	1	1	1	1	1
5	5	D-IA-7014975-0-0	7014975-00	CHASSIS,ASSY CRT	1	1	1	1	1	1	1	1	1	1	1	1
6	6		7014977-00	*** THIS ITEM IS NOT USED ***	-	-	-	-	-	-	-	-	-	-	-	-
7	7	D-AD-7014979-0-0	7014979-00	POWER SUPPLY ASSY	1	1	1	1	1	1	1	1	1	1	1	1
8	8	D-IA-7014978-0-0	701497B-01	POWER CABLE ASSY. VT100	1	1	1	1	1	1	1	1	1	1	1	1
9	9	D-UA-5413009-0-0	5413009-00	VT100 BASIC VIDEO CONTROLLER	1	1	1	1	1	1	-	-	-	-	-	-
10	10		7419836-00	*** THIS ITEM IS NOT USED ***	-	-	-	-	-	-	-	-	-	-	-	-
11	11		30160B0-00	MONITOR ASSY,CRT,DIRECT DRIVE RA	1	1	1	1	1	1	1	1	1	1	1	1
12	12		9010007-00	RING, RETAINING,EXTERNAL FOR 7/6	4	4	4	4	4	4	4	4	4	4	4	4
13	13		9009967-00	SCREW,HEX,SLOT,SEMS 6-32X .312L	10	10	10	10	10	10	10	10	10	10	10	10
14	14		36156B0-00	LABEL,ADHESIVE BACK,SWITCH POSIT	1	1	1	1	1	1	1	1	1	1	1	1
15	15	A-PS-1700083-0-0	1700083-09	PWR CORD,TERM. 75IN,18-3,125V 10	1	-	1	-	1	-	1	-	1	-	1	-
16	16	A-PS-1700083-0-0	17000B3-10	PWR CORD,TERM. 75IN,18-3,250V 6	-	1	-	1	-	1	-	1	-	1	-	1
17	17	D-UA-7014653-0-0	7014653-02	KEYBOARD ASSY.	-	-	1	1	-	-	-	-	-	-	-	-
18	18		7414213-00	*** THIS ITEM IS NOT USED ***	-	-	-	-	-	-	-	-	-	-	-	-
19	19		3613210-01	*** THIS ITEM IS NOT USED ***	-	-	-	-	-	-	-	-	-	-	-	-
20	20		3613210-02	*** THIS ITEM IS NOT USED ***	-	-	-	-	-	-	-	-	-	-	-	-
21	21		3613211-01	*** THIS ITEM IS NOT USED ***	-	-	-	-	-	-	-	-	-	-	-	-
22	22		3700324-00	INSTR PKG DISPLAY VT100	1	1	1	1	1	1	1	1	1	1	1	1
23	23	E-UA-VT1XX-AA-0	VT1XX-AA	VT100 20MA CURRENT LOOP OPTION W	REF	REF	REF	REF	REF	REF	REF	REF	REF	REF	REF	REF
24	24	A-PL-VT1XX-AB-0	VT1XX-AB	ADVANCED VIDEO OPTION FOR VT100	REF	REF	REF	REF	REF	REF	-	-	-	-	-	-
25	25		9006659-00	WASHER, FLAT, .375 O.D. X .156 I	1	1	1	1	1	1	1	1	1	1	1	1
26	26		9007649-00	*** THIS ITEM IS NOT USED ***	-	-	-	-	-	-	-	-	-	-	-	-
27	27		9010112-00	SCREW,TAPPING,TYPE B,HEX ,SLOT,	1	1	1	1	1	1	1	1	1	1	1	1
28	28	E-UA-7014653-0-0	7014653-03	KEYBOARD ASSY.	-	-	-	-	1	1	-	-	-	-	-	-
29	29	D-CS-5413097-0-1	5413097-00	VT100 ADVANCED VIDEO	-	-	-	-	1	1	-	-	-	-	-	-
30	30		9009313-01	SUPPORT,C.BD.,FLAME RET.,NATURAL	-	-	-	-	4	4	4	4	4	4	4	4

REVISION HISTORY			
ENG	ECO NUMBER	REV	
GB	VT100-ML034	T	
JD	VT100-ML035	U	
JD	VT100-ML036	V	
JD	VT100-ML038	W	

BASIC PART NO: VT100

SECTION A OF B

SECTION. VARIATION INDEX

[A] AA,AB,NA,NB,WA,WB, WC,WD,WE,WF,WG,WH

[B] WJ,WK,WY,WZ,LA,LB, PA,PB,PC,PD,PE,PF

[C]

[D]

[E]

[F]

DRN: B. BLODGETT — DATE: 3-SEP-77

CHK'D: D. HEALY — DATE: 24-SEP-77

DES.ENG.: E. WEDEKING — DATE: 26-JUN-78

RESP.ENG.: G. DOUMANI — DATE: 26-JUN-78

MFG.ENG.: K. HOFFMAN — DATE: 7-JUL-78

ASSEMBLY NUMBER: E-UA-VT100-0-0

TOP DOCUMENT NUMBER: #B-DD-VT100-0

D I G I T A L

TITLE PARTS LIST

VT100 UNIT ASSY.

DOCUMENT NUMBER SIZE	CODE	NUMBER	REV
K	PL	VT100-0-DBP	W

FILE NAME: Z1607W.PLS

EDIT # 15

AUTOMATED BY PRTLST.3P(44)

P A R T S L I S T

LINE	ITEM	DOCUMENT NUMBER	PART NUMBER	DESCRIPTION	QUANTITY PER VARIATION AA	AB	NA	NB	WA	WB	WC	WD	WE	WF	WG	WH
31	31		9010135-00	SCREW,FLAT,SLOT 8-32X 1/2	4	4	4	4	4	4	4	4	4	4	4	4
32	32	E-UA-7014653-0-0	7014653-05	KEYBD ASSY FR CANADIAN WP KEYCAP	-	-	-	-	-	-	1	1	-	-	-	-
33	33	E-UA-7014653-0-0	7014653-06	KEYBD ASSY FRENCH + WP KEYCAPS	-	-	-	-	-	-	-	-	1	1	-	-
34	34	E-UA-7014653-0-0	7014653-07	KEYBD ASSY DUTCH WP KEYCAPS	-	-	-	-	-	-	-	-	-	-	1	1
35	35	E-UA-7014653-0-0	7014653-08	*** THIS ITEM IS NOT USED ***	-	-	-	-	-	-	-	-	-	-	-	-
36	36	D-UA-5413097-0-0	5413097-03	VT100 ADVANCED VIDEO	-	-	-	-	-	-	1	1	1	1	1	1
37	37	D-UA-5413009-0-0	5413009-02	VT100 BASIC VIDEO	-	-	-	-	-	-	1	1	1	1	1	1
38	38		3016080-53	*** THIS ITEM IS NOT USED ***	-	-	-	-	-	-	-	-	-	-	-	-
39	39	D-IA-7014974-0-0	7014974-02	*** THIS ITEM IS NOT USED ***	-	-	-	-	-	-	-	-	-	-	-	-
40	40	D-UA-7014653-0-0	7014653-10	*** THIS ITEM IS NOT USED ***	-	-	-	-	-	-	-	-	-	-	-	-
41	41	D-UA-7014653-0-0	7014653-09	*** THIS ITEM IS NOT USED ***	-	-	-	-	-	-	-	-	-	-	-	-
42	42		3616157-00	LABEL,CORRECT VOLTAGE SETTING,CA	1	1	1	1	1	1	1	1	1	1	1	1
43	43	B-IA-7423018-0-0	7423018-00	ISOLATION MOUNT.	2	2	2	2	2	2	2	2	2	2	2	2
44	44	B-MD-7423006-0-0	7423006-00	SCREW,HEX WASHER HD,4-40	2	2	2	2	2	2	2	2	2	2	2	2
45	45		9008193-00	WASHER, NYLON, FLAT .312 X .812	2	2	2	2	2	2	2	2	2	2	2	2
46	46	E-IA-7016624-0-0	7016624-00	FRAME,PC CARD ASSY	1	1	1	1	1	1	1	1	1	1	1	1
47	47	D-IA-7419469-0-0	7419469-00	STOP P.C. CARD	1	1	1	1	1	1	1	1	1	1	1	1
48	48		1212405-00	CARD GUIDE,NYLON	2	2	2	2	2	2	2	2	2	2	2	2
49	49	A-PS-3617544-0-0	3617544-00	LABEL,X-RAY RADIATION	1	1	1	1	1	1	1	1	1	1	1	1
50	50		3617674-01	LABEL,SERIAL & POWER W/UL & CSA	1	1	1	1	1	1	1	1	1	1	1	1

D	I	G	I	T	A	L	TITLE	SECTION	SIZE	CODE	DOCUMENT NUMBER	REV
							VT100 UNIT ASSY.	A OF B	K	PL	VT100-0-DBP	W

AUTOMATED BY PRTLST.3P(44)

P A R T S L I S T

LINE	ITEM	DOCUMENT NUMBER	PART NUMBER	DESCRIPTION	QUANTITY PER VARIATION WJ	WK	WY	WZ	LA	LB	PA	PB	PC	PD	PE	PF
1	1	D-UA-7014653-0-0	7014653-00	KEYBOARD ASSY	-	-	-	-	1	1	-	-	-	-	-	-
2	2	E-IA-7014980-0-0	7014980-00	BASE ASSY ENCLOSURE	1	1	1	1	1	1	1	1	1	1	1	1
3	3	D-IA-7014976-0-0	7014976-00	WORT BOX ASSY	1	1	1	1	1	1	1	1	1	1	1	1
4	4	D-IA-7014974-0-0	7014974-00	ENCLOSURE, CRT TOP ASSY	1	1	1	1	1	1	-	-	-	-	-	-
5	5	D-IA-7014975-0-0	7014975-00	CHASSIS,ASSY CRT	1	1	1	1	1	1	1	1	1	1	1	1
6	6		7014977-00	*** THIS ITEM IS NOT USED ***	-	-	-	-	-	-	-	-	-	-	-	-
7	7	D-AD-7014979-0-0	7014979-00	POWER SUPPLY ASSY	1	1	1	1	1	1	1	1	1	1	1	1
8	8	D-IA-7014978-0-0	7014978-01	POWER CABLE ASSY. VT100	1	1	1	1	1	1	1	1	1	1	1	1
9	9	D-UA-5413009-0-0	5413009-00	VT100 BASIC VIDEO CONTROLLER	-	-	-	-	1	1	1	1	-	-	-	-
10	10		7419836-00	*** THIS ITEM IS NOT USED ***	-	-	-	-	-	-	-	-	-	-	-	-
11	11		3016080-00	MONITOR ASSY,CRT,DIRECT DRIVE RA	1	1	1	1	-	-	1	1	1	1	1	1
12	12		9010007-00	RING, RETAINING,EXTERNAL FOR 7/6	4	4	4	4	4	4	4	4	4	4	4	4
13	13		9009967-00	SCREW,HEX,SLOT,SEMS 6-32X .312L	10	10	10	10	10	10	10	10	10	10	10	10
14	14		3615680-00	LABEL,ADHESIVE BACK,SWITCH POSIT	1	1	1	1	1	1	1	1	1	1	1	1
15	15	A-PS-1700083-0-0	1700083-09	PWR CORD,TERM. 75IN,18-3,125V 10	1	-	1	-	1	-	1	-	1	-	1	-
16	16	A-PS-1700083-0-0	1700083-10	PWR CORD,TERM. 75IN,18-3,250V 6	-	1	-	1	-	1	-	1	-	1	-	1
17	17	D-UA-7014653-0-0	7014653-02	*** THIS ITEM IS NOT USED ***	-	-	-	-	-	-	-	-	-	-	-	-
18	18		7414213-00	*** THIS ITEM IS NOT USED ***	-	-	-	-	-	-	-	-	-	-	-	-
19	19		3613210-01	*** THIS ITEM IS NOT USED ***	-	-	-	-	-	-	-	-	-	-	-	-
20	20		3613210-02	*** THIS ITEM IS NOT USED ***	-	-	-	-	-	-	-	-	-	-	-	-
21	21		3613211-01	*** THIS ITEM IS NOT USED ***	-	-	-	-	-	-	-	-	-	-	-	-
22	22		3700324-00	INSTR PKG DISPLAY VT100	1	1	1	1	1	1	1	1	1	1	1	1
23	23	E-UA-VT1XX-AA-0	VT1XX-AA	VT100 20MA CURRENT LOOP OPTION W	REF	REF	REF	REF	REF	REF	REF	REF	-	-	-	-
24	24	A-PL-VT1XX-AB-0	VT1XX-AB	ADVANCED VIDEO OPTION FOR VT100	-	-	-	-	REF	REF	REF	REF	-	-	-	-
25	25		9006659-00	WASHER, FLAT, .375 O.D. X .156 I	1	1	1	1	1	1	1	1	1	1	1	1
26	26		9007649-00	*** THIS ITEM IS NOT USED ***	-	-	-	-	-	-	-	-	-	-	-	-
27	27		9010112-00	SCREW,TAPPING,TYPE B,HEX ,SLOT,	1	1	1	1	1	1	1	1	1	1	1	1
28	28	E-UA-7014653-0-0	7014653-03	KEYBOARD ASSY.	-	-	1	1	-	-	-	-	-	-	-	-
29	29	D-CS-5413097-0-1	5413097-00	*** THIS ITEM IS NOT USED ***	-	-	-	-	-	-	-	-	-	-	-	-
30	30		9009313-01	SUPPORT,C.BD.,FLAME RET.,NATURAL	4	4	4	4	-	-	-	-	-	-	-	-

REVISION HISTORY			BASIC PART NO: VT100
ENG	ECO NUMBER	REV	SECTION B OF B
GB	VT100-ML034	T	SECTION. VARIATION INDEX
JD	VT100-ML035	U	[A] AA,AB,NA,NB,WA,WB, WC,WD,WE,WF,WG,WH
JD	VT100-ML036	V	
JD	VT100-ML03B	W	[B] WJ,WK,WY,WZ,LA,LB, PA,PB,PC,PD,PE,PF
			[C]
			[D]
			[E]
			[F]

DRN: B. BLODGETT — DATE: 3-SEP-77

CHK'D: D. HEALY — DATE: 24-SEP-77

DES.ENG.: E. WEDEKING — DATE: 26-JUN-78

RESP.ENG.: G. DOUMANI — DATE: 26-JUN-78

MFG.ENG.: K. HOFFMAN — DATE: 7-JUL-78

D I G I T A L

TITLE PARTS LIST

VT100 UNIT ASSY.

DOCUMENT NUMBER			
SIZE	CODE	NUMBER	REV
K	PL	VT100-0-DBP	W

ASSEMBLY NUMBER: E-UA-VT100-0-0

TOP DOCUMENT NUMBER: #B-DD-VT100-0

FILE NAME: Z1607W.PLS

EDIT # 15

AUTOMATED BY PRTLST.3P(44)

P A R T S L I S T

LINE	ITEM	DOCUMENT NUMBER	PART NUMBER	DESCRIPTION	QUANTITY PER VARIATION WJ	WK	WY	WZ	LA	LB	PA	PB	PC	PD	PE	PF
31	31		9010135-00	SCREW,FLAT,SLOT B-32X 1/2	4	4	4	4	4	4	4	4	4	4	4	4
32	32	E-UA-7014653-0-0	7014653-05	*** THIS ITEM IS NOT USED ***	-	-	-	-	-	-	-	-	-	-	-	-
33	33	E-UA-7014653-0-0	7014653-06	*** THIS ITEM IS NOT USED ***	-	-	-	-	-	-	-	-	-	-	-	-
34	34	E-UA-7014653-0-0	7014653-07	*** THIS ITEM IS NOT USED ***	-	-	-	-	-	-	-	-	-	-	-	-
35	35	E-UA-7014653-0-0	7014653-0B	KEYBD ASSY GERMAN WP KEYCAPS	1	1	-	-	-	-	-	-	-	-	-	-
36	36	D-UA-5413097-0-0	5413097-03	VT100 ADVANCED VIDEO	1	1	1	1	-	-	-	-	-	-	-	-
37	37	D-UA-5413009-0-0	5413009-02	VT100 BASIC VIDEO	1	1	1	1	-	-	-	-	-	-	-	-
38	38		3016080-53	MONITOR ASSY,W/P40PHOSPHOR CRT N	-	-	-	-	1	1	-	-	-	-	-	-
39	39	D-IA-7014974-0-0	7014974-02	ENCLOSURE CRT TOP ASSY W/DK. GRA	-	-	-	-	-	-	1	1	1	1	1	1
40	40	D-UA-7014653-0-0	7014653-10	KEYBD ENCLOSURE ASSY NO KEYBD	-	-	-	-	-	-	-	-	-	-	1	1
41	41	D-UA-7014653-0-0	7014653-09	KEYBD/KEYCAP ASSY DARK GRAY	-	-	-	-	-	-	1	1	1	1	-	-
42	42		3616157-00	LABEL,CORRECT VOLTAGE SETTING,CA	1	1	1	1	1	1	1	1	1	1	1	1
43	43	B-IA-7423018-0-0	7423018-00	ISOLATION MOUNT.	2	2	2	2	2	2	2	2	2	2	2	2
44	44	B-MD-7423006-0-0	7423006-00	SCREW,HEX WASHER HD,4-40	2	2	2	2	2	2	2	2	2	2	2	2
45	45		9008193-00	WASHER, NYLON, FLAT .312 X .812	2	2	2	2	2	2	2	2	2	2	2	2
46	46	E-IA-7016624-0-0	7016624-00	FRAME,PC CARD ASSY	1	1	1	1	1	1	1	1	1	1	1	1
47	47	D-IA-7419469-0-0	7419469-00	STOP P.C. CARD	1	1	1	1	1	1	1	1	1	1	1	1
48	48		1212405-00	CARD GUIDE,NYLON	2	2	2	2	2	2	2	2	2	2	2	2
49	49	A-PS-3617544-0-0	3617544-00	LABEL,X-RAY RADIATION	1	1	1	1	1	1	1	1	1	1	1	1
50	50		3617674-01	LABEL,SERIAL & POWER W/UL & CSA	1	1	1	1	1	1	1	1	1	1	1	1

D	I	G	I	T	A	L	TITLE	SECTION B OF B
							VT100 UNIT ASSY.	

SIZE	CODE	DOCUMENT NUMBER	REV
K	PL	VT100-0-DBP	W

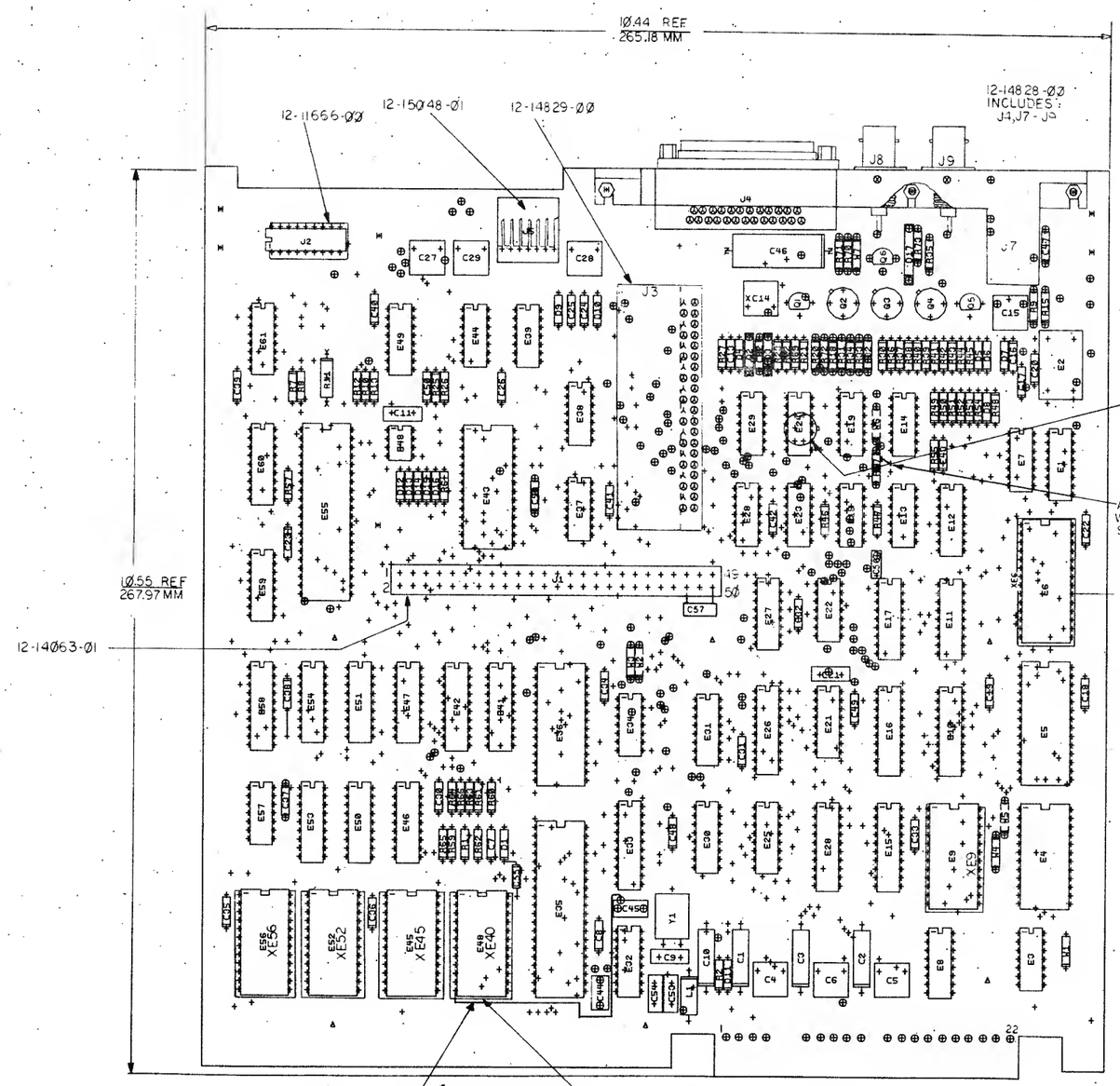
10.44 REF
265.18 MM
10.55 REF
267.97 MM
12-11666-00
12-15048-01
12-14829-00
12-14828-00
INCLUDES:
J4,J7-J9
12-14063-01
SEE NOTES
ADD 22 AWG BUSS WIRE TO PTH'S AS SHOWN
12-15006-57
ADD 30AWG WIRE FROM E40-12 TO GND PTH AS SHOWN
12-10693-00
5 PLACES
90-06010-01
90-06557-00
3 PLACES
digital
TITLE
VT-100
BASIC VIDIO
NUMBER
54-13009-00
REV
E
DATE
SIGNATURES
DRN-DOUG POWERS
CHK'D
ENG.
PROJ. ENG.
PROD. ENG.
SHT. E
OF 1
NEXT HIGHER ASSY: B.DO 54-13009-0
ETCH REV: E P1
P.C. DESIGN DATE BASE REV: E P1
CHK CHANGE NO REV
NOTES:
1. E24 PC 41424 CAN BE EITHER ROUND TOP OR THE 8 PIN
2. REV-S CREATES ROMLESS VARIATION-99
E UA 54-13009-0 T

V01

AUTOMATED BY PRTLST.1D(11)

P A R T S L I S T

LINE	ITEM	DOCUMENT NUMBER	PART NUMBER	DESCRIPTION	QTY PER VARIATION 00	01	02	99	REFERENCE DESIGNATOR
1	1	D-MD-5013008-0-0	5013008-00	VT100 BASIC VIDEO	1	1	1	1	
2	2		1000005-00	6.8 MMF 100V 5%200PPM MICA	1	1	1	1	C9
3	3		1000014-00	68.0 MMF 100V 5%200PPM MICA	1	1	1	1	C11
4	4		1000016-00	100.0 MMF 100V 5%200PPM MICA	2	2	2	2	C21,C54
5	5		1000076-00	39 MFD 10V 10% S.TANT	1	1	1	1	C10
6	7		1005306-00	6.8MFD 35V 10% S.TANT	3	3	3	3	C1,C2,C3
7	8		1010274-01	.22 MFD 50V +80-20% Z5U CER	12	12	12	12	C4-C6,C14,C15,C27-C29,C44,C45,
8	9	SEE NOTE	1012784-00	.047 MFD 50V +80-20% CER	26	26	26	CONT 26	C55,C56 C7,C8,C13,C18-C20,C22,C24,C25,
9	10		1013466-12	2200.0 MMF 50V 10% X7R CER	1	1	1	CONT 1	C30-C43,C48-C50 C26
10	11	SEE NOTE	1100114-00	D 664 QS\75PCB PIV= 25V SP	11	11	11	11	D4-D8,D11-D16
11	12		1105796-00	1N 4004 PIV=400 I= 1A D041 SP	2	2	2	2	D9,D10
12	13		1109502-03	1N 4742A VZ= 12.0 5% 1W	1	1	1	1	D3
13	14		1110994-00	1N 751A VZ= 5.1 5% .40W	1	1	1	1	D1
14	15		1114974-00	1N 4741A VZ= 11.0 5% 1W	1	1	1	1	D2
15	16		1215006-06	SOCKET 24PIN IC LOW PROFILE	5	5	5	5	XE9,XE40,XE45,XE52,XE56
16	17		1211666-00	SOCKET 18PIN IC LOW PROFILE	1	1	1	1	J2
17	18		1214063-01	HEADER.150 50POS STRAIGHT	1	1	1	1	J1
18	19		1214828-00	CONN, 25POS RCPT	1	1	1	1	J4
19	20		1214829-00	CONN 40POS RT ANGLE	1	1	1	1	J3
20	21		1215048-01	CONN 7POS RT ANGLE	1	1	1	1	J5
21	22		1300005-07	R NETWORK 15-4.7K 5.0 % 16PIN	3	3	3	3	E8,E12,E59
22	23		1300219-00	68.0 .25 W 5.0 % CC	1	1	1	1	R40
23	24		1300229-00	100.0 .25 W 5.0 % CC	1	1	1	1	R34
24	25		1300250-00	150.0 .25 W 5.0 % CC	1	1	1	1	R51
25	26		1300271-00	220.0 .25 W 5.0 % CC	1	1	1	1	R41
26	27		1300295-00	330.0 .25 W 5.0 % CC	3	3	3	3	R1,R46,R47
27	28		1300315-00	470.0 .50 W 5.0 % CC	1	1	1	1	R11
28	29		1300316-00	470.0 .25 W 5.0 % CC	2	2	2	2	R21,R55

REVISION HISTORY

ENG	ECO NUMBER	REV
RP	5413009-PN009	M
JD	5413009-PN010	N
---	5413009-ML011	P
RP	ML012	R
CJ	5413009-ML013	S
RP	5413009-ML014	T
RP	5413009-ML015	U
RP	5413009-ML016	V
DP	5413009-ML017	W
DP	5413009-ML018	Y
JD	5413009-ML019	Z
RP	5413009-ML020	AA

BASIC PART NO: 5413009

SECTION A OF A

SECTION.VARIATION INDEX
[A] 00,01,02,99
[B]
[C]
[D]
[E]
[F]
[H]
[J]
[K]
[L]
[M]
[N]

DRN: T. SHETRAWSKI — DATE: 30-MAR-78

CHK'D: T. SHETRAWSKI — DATE: 11-MAR-78

DES.ENG: D. PUCCI — DATE: 30-MAR-78

RESP.ENG.: D. PUCCI — DATE: 30-MAR-78

MFG.ENG.: T. CORCIARI — DATE: 30-MAR-78

ASSEMBLY NUMBER: E-UA-5413009-0-0

TOP DOCUMENT NUMBER: B-DD-5413009-0-0

D I G I T A L

TITLE PARTS LIST

VT100 BASIC VIDEO

DOCUMENT NUMBER

SIZE	CODE	NUMBER	REV
K	PL	5413009-0-DBP	AA

FILE NAME: ML01AA.PLS

EDIT # 11

AUTOMATED BY PRTLST.1D(11)

PARTS LIST

LINE	ITEM	DOCUMENT NUMBER	PART NUMBER	DESCRIPTION	QTY PER VARIATION 00	01	02	99	REFERENCE DESIGNATOR
29	30		1300365-00	1.0 K .25 W 5.0 % CC	2	2	2	2	R36,R67
30	31		1300398-00	1.80 K .25 W 5.0 % CC	1	1	1	1	R31
31	32		1300417-00	2.20 K .25 W 5.0 % CC	5	5	5	5	R18,R20,R22,R23,R27
32	33		1300426-00	2.70 K .25 W 5.0 % CC	1	1	1	1	R7
33	34		1300447-00	4.70 K .25 W 5.0 % CC	1	1	1	1	R25
34	35	SEE NOTE	1300479-00	10.0 K .25 W 5.0 % CC	4	4	4	4	R2,R6,R12,R26
35	36		1301317-00	10.0 .25 W 5.0 % CC	1	1	1	1	R57
36	37		1301422-00	7.50 K .25 W 5.0 % CC	8	8	8	8	R59-R66
37	38		1301424-00	680.0 .25 W 5.0 % CC	1	1	1	1	R37
38	39		1301425-00	300.0 .25 W 5.0 % CC	1	1	1	1	R50
39	40		1301475-00	1.10 K .25 W 5.0 % CC	1	1	1	1	R32
40	42	SEE NOTE	1301874-00	5.60 K .25 W 5.0 % CC	1	1	1	1	R9
41	43	SEE NOTE	1301972-00	270.0 .25 W 5.0 % CC	1	1	1	1	R38
42	44		1302379-00	75.0 .25 W 5.0 % CC	4	4	4	4	R35,R45,R52,R54
43	45		1302391-00	20.0 K .25 W 5.0 % CC	2	2	2	2	R43,R48
44	47		1303178-00	620.0 .25 W 5.0 % CC	1	1	1	1	R49
45	48		1303187-00	820.0 K .25 W 5.0 % CC	1	1	1	1	R8
46	49		1304833-00	1.96 K .25 W 1.0 % RN55D-F10	1	1	1	1	R15
47	51		1313580-00	360.0 .25 W 5.0 % CC	1	1	1	1	R39
48	52		1314673-00	36.0 .25 W 5.0 % CC	1	1	1	1	R53
49	53		1501913-00	2N 2904A PNP 600MW SI 60 40 Y	3	3	3	3	Q2,Q3,Q4
50	54		1503409-00	DEC6534D PNP 310MW SI 40 90	1	1	1	1	Q1
51	55	SEE NOTE	1509524-00	2N 3904 NPN 310MW SI 40 40 M	1	1	1	1	Q5
52	56		1810694-06	XTAL 24.8832 MHZ	1	1	1	1	Y1
53	57		1814830-00	OSCILLATOR, XTAL 24.073 MHZ	1	1	1	1	E2
54	58		1909686-00	7404 INVERTER GATE-HEX 1I	1	1	1	1	E38
55	59		1909928-00	7416 INVERTER GATE-HEX 1I	2	2	2	2	E14,E18
56	60		1909929-00	7417 BUFFER GATE-HEX 1INP	1	1	1	1	E29
57	61		1910236-00	DEC 7426 NAND GATE-QUAD 2IN,O	1	1	1	1	E7
58	62		1910322-00	DEC 1488L DRIVER,LINE,QUAD,EI	1	1	1	1	E39
59	63		1910548-00	74S157 MUX 1 OF 2 (QUAD)	1	1	1	1	E1
60	64		1912697-00	LS174 FF-D HEX W/CLEAR	2	2	2	2	E49,E61
61	65		1912799-00	LS00 NAND-GATE-QUAD 2IN,P	2	2	2	2	E23,E34
62	66		1912803-00	6S04 INVERTER GATE,HEL	1	1	1	1	E19
63	67		1912815-00	LS30 NAND GATE-SINGLE 8IN	1	1	1	1	E3
64	68		1912818-00	LS38 NAND BUFFER-QUAD 2IN	1	1	1	1	E28
65	69		1912824-00	LS74 FF-D DUAL,EDGE TRIGG	2	2	2	2	E13,E22
66	70		1912842-00	LS138 DECODER-THREE INPUT,	1	1	1	1	E27
67	71		1912843-00	LS139 DECODER, 2 OF 4(DUAL	1	1	1	1	E31
68	72		1912854-00	LS193 COUNTER,SYNCHR,4BIT,	3	3	3	3	E21,E25,E30
69	73		1912863-00	LS273 FF-D OCTAL W/CLEAR	2	2	2	2	E16,E20
70	74		1913105-00	PB 8224C DRIVER/GEN CLOCK F	1	1	1	1	E32
71	75		1913109-00	8228 BUFFER,DATA BASE FOR	1	1	1	1	E36
72	76		1913130-00	DEC 1489A RECEIVER,LINE,QUAD,	2	2	2	2	E37,E44
73	77		1914084-00	74S299 SHIFT REG.,8BIT RIGH	1	1	1	1	E10
74	78		1914156-00	LM 393 VOLT.COMPARATOR DUAL	1	1	1	1	E48
75	79		1914213-00	81LS97 BUFFER GATE-OCTAL 2I	4	4	4	4	E15,E41,E42,E58
76	80		1914214-00	LS374 FF-D OCTAL EDGE TRIG	2	2	2	2	E26,E33

D I G I T A L	TITLE		SIZE	CODE	DOCUMENT NUMBER	REV
	VT100 BASIC VIDEO	SECTION A OF A	K	PL	5413009-0-DBP	AA

LINE	ITEM	DOCUMENT NUMBER	PART NUMBER	DESCRIPTION	QTY PER VARIATION 00	01	02	99	REFERENCE DESIGNATOR
77	81		1914423-01	CUSTOM LSI-BIPOLAR LS	1	1	1	1	E6
78	82		1914424-01	CUSTOM LSI-BIPOLAR L	1	1	1	1	E5
79	83		2112623-02	DUAL BAUD RATE GEN/PROG DIVIDER	1	1	1	1	E60
80	84		2113106-01	1K MOS RAM 250NS	2	2	2	2	E11,E17
81	85		2113107-01	P 8251A PUSART COMM. INTERFA	1	1	1	1	E43
82	86		2113108-01	8080A-1 MICROPROCESSOR UNIT	1	1	1	1	E35
83	87		2113937-00	UART 125K BUAD	1	1	1	1	E55
84	88		2114212-00	P 2114-2 RAM,1024X4,STATIC	6	6	6	6	E46,E47,E50,E51,E53,E54
85	89		2114524-01	ROM 100X14BIT,ERASABLE,	1	1	1	1	E24
86	90		23018E2-00	E2-03	1	1	1	1	E4
87	91		9006010-01	SCREW,PAN,PHIL 4-40X 5/16 SS	3	3	3	3	
88	92		9006557-00	NUT,KEP , 4-40X 1/4 AF	3	3	3	3	
89	93		9009185-00	JUMPER, WIRE, INSULATED, BLACK B	4	4	4	4	W1,W3,W4,W7
90	95		23061E2-00	E2-02	1	-	-	-	E56
91	96		23032E2-00	E2-02	1	-	-	-	E52
92	97		23033E2-00	E2-02	1	-	-	-	E45
93	98		23034E2-00	E2-02	1	-	-	-	E40
94	102		1001610-00	.01 MFD 50V +80-20% 25U CER	4	4	4	4	C16,C17,C23,C51
95	103		1301320-00	1.20 K .25 W 5.0 % CC	1	1	1	1	R30
96	104		1301322-00	180.0 .25 W 5.0 % CC	1	1	1	1	R33
97	105		1301477-00	82.0 .25 W 5.0 % CC	1	1	1	1	R42
98	106		1300202-00	47.0 .25 W 5.0 % CC	1	1	1	1	R44
99	107		1303155-00	21.50 K .25 W 1.0 % RN55D-F10	1	1	1	1	R10
100	108		1309412-00	18.20 K .25 W 1.0 % RN55D-F10	1	1	1	1	R13
101	109		1609620-00	2.2 UH #RFCS2.2	1	1	1	1	L1
102	110		1002608-00	18.0 MMF 100V 5%200PPM MICA	1	1	1	1	C53
103	112		1013466-05	56.0 MMF 50V 5% CER	1	1	1	1	C47
104	113		23180E2-00	E2-02	-	1	1	-	E56
105	114		23181E2-00	E2-02	-	1	1	-	E52
106	115		23182E2-00	E2-02	-	1	1	-	E45
107	116		23183E2-00	E2-02	-	1	1	-	E40
108	117		1215006-07	SOCKET 28PIN IC LOW PROFILE	1	1	1	1	XE6
109	118		23094E2-00	E2-03,E2-04	-	-	1	-	E9
110	119	A-SP-3700553-0-0	3700553-00	PKG MODULE 5413009	REF	REF	REF	REF	
111	120	A-SP-3700428-0-0	3700428-00	INSTR PKG. BULK CARTON 99-06476-	REF	REF	REF	REF	
112	121		1300005-03	R NETWORK 13-10K 5.0 % 14PIN	1	1	1	1	E57
113	122		9105740-55	WIRE(WRAP)30AWG UL1423	A/R	A/R	A/R	A/R	
114	123		1000021-00	220.0 MMF 100V 5%200PPM MICA	1	1	1	1	C57
115	124		9107560-01	WIRE,BUSS,22AWG	A/R	A/R	A/R	A/R	

116 NOTE: THE FOLLOWING COMPONENTS ARE OPTIONAL AND ARE NOT TO BE INSERTED:
117 NOTE: C46 PART #1001796, C52 PART #1012784,
118 NOTE: D17 PART #1110766, R71 PART #1300479, R69,R72 PART #1301808,
119 NOTE: R73 PART #1301874, R70 PART #1301972, Q6 PART #1509524,

D	I	G	I	T	A	L	TITLE	SECTION A OF A	SIZE	CODE	DOCUMENT NUMBER	REV
							VT100 BASIC VIDEO		K	PL	5413009-0-DBP	AA

LINE ITEM	DOCUMENT NUMBER	PART NUMBER	DESCRIPTION	QTY PER VARIATION 00	01	02	99	REFERENCE DESIGNATOR
120 NOTE:	FOR INDIVIDUAL FIELD SERVICE/CUSTOMER SPARES SHIPMENTS USE PACKAGING INSTRUCTION, A-SP-3700553-0-0;							
121 NOTE:	FOR BULK INTERPLANT SHIPMENTS USE PACKAGING INSTRUCTION, A-SP-3700428-0-0 VARIATION -02							

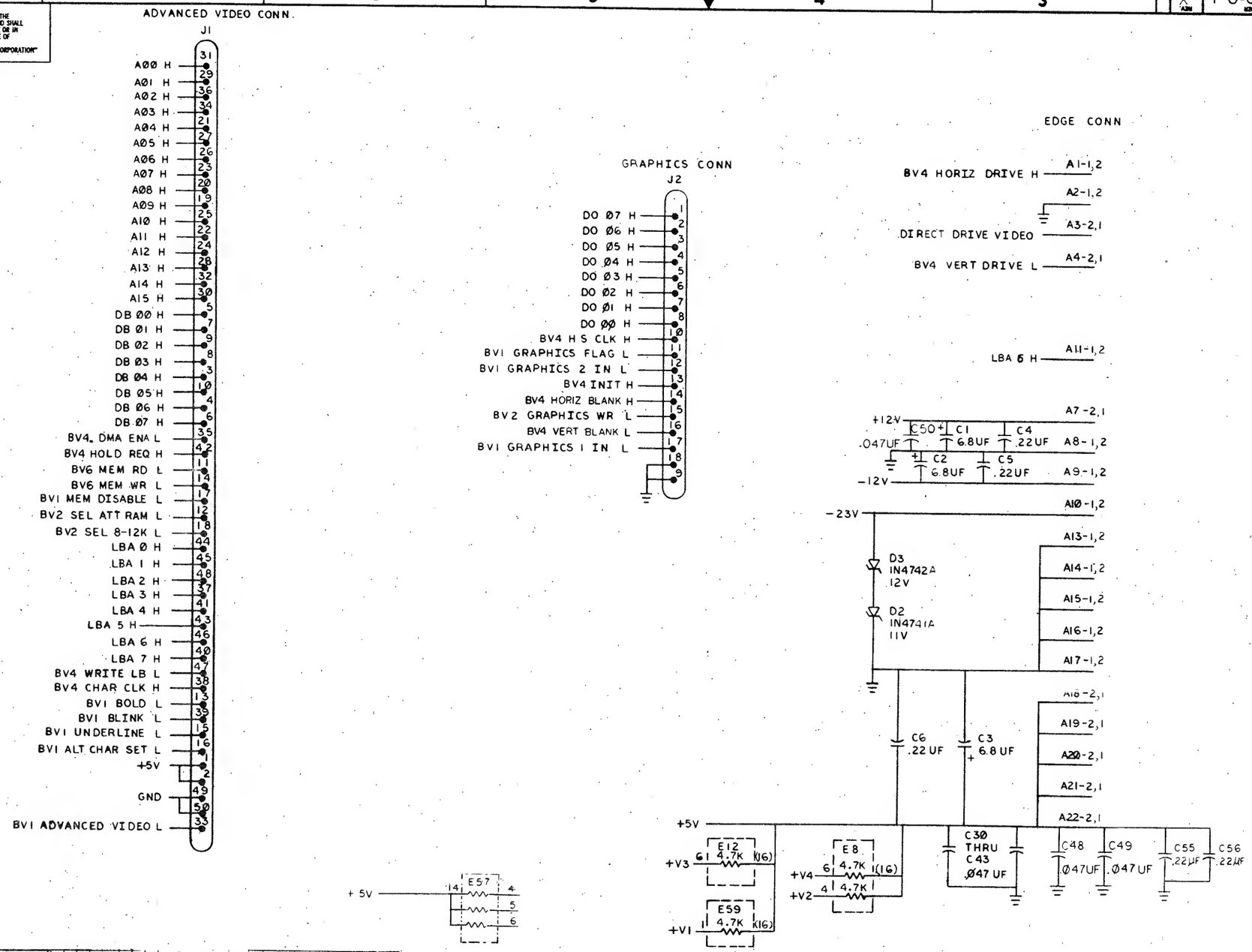

REVISIONS			
CHK	CHANGE NO.		REV.
	5413009-ML001		C
R. PUCCI	10-6-78		
	5413009 ML002		D
R. PUCCI	8 DEC 78		
R. PUCCI	1-5-79		
ML011			
CARTER			
K. HOFFMAN			
	5413009 - ML013		S
CRAIG JAMES			
	5413009 - ML014		T
R. PUCCI			
	5413009 ML016		U
R. PUCCI			
	5413009 - ML017		V
R. PUCCI	9-5-80		
	5413009 - ML019		W
R. PUCCI	10-20-80		
	5413009-ML020		Y
R. PUCCI			

DRN.		2-1-78
CHK'D		6/1/78
ENG.		5/14/78
PROJ. ENG.		5/14/78
PROD.		6/13/78
NEXT HIGHER ASSY.		
E-UA-5413009-0-0		
SCALE	—	
SHEET 1	DF 6	

FIRST USED ON: VT100

TITLE: VT100 BASIC VIDEO (BV1)

SIZE	CODE	NUMBER	REV.
D	CS	5413009-0-1	Y

DIST.

D CS 5413009-0-1 Y

NOTE:
1. OPTIONAL DO NOT INSERT.

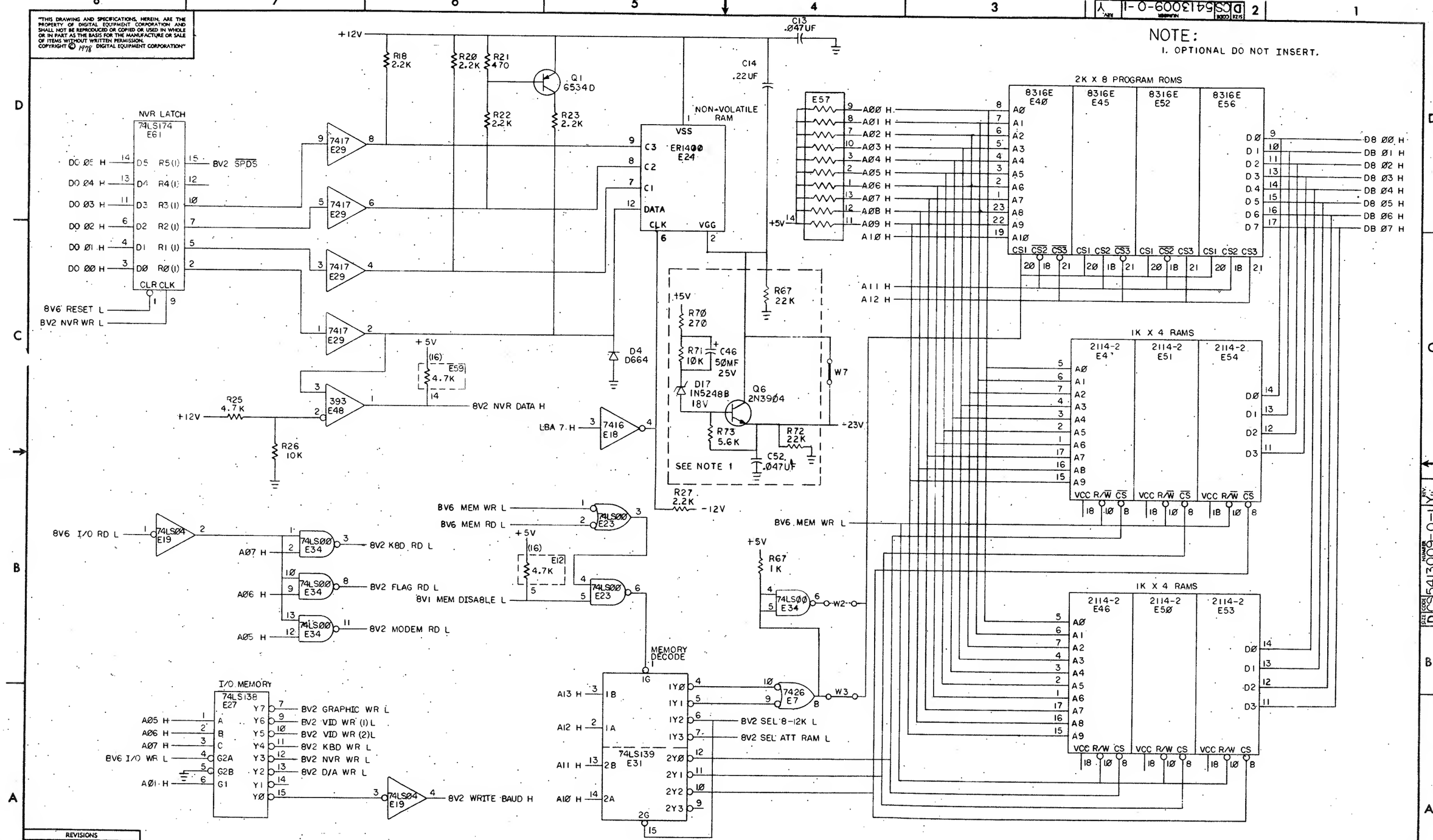

REVISIONS		
CHK	CHANGE NO.	REV.

TITLE	SIZE	CODE	NUMBER	REV.
VT1ØØ BASIC VIDEO (BV2)	D	CS	5413009-0-1	Y
SCALE —	SHEET 2 OF 6	DIST.		

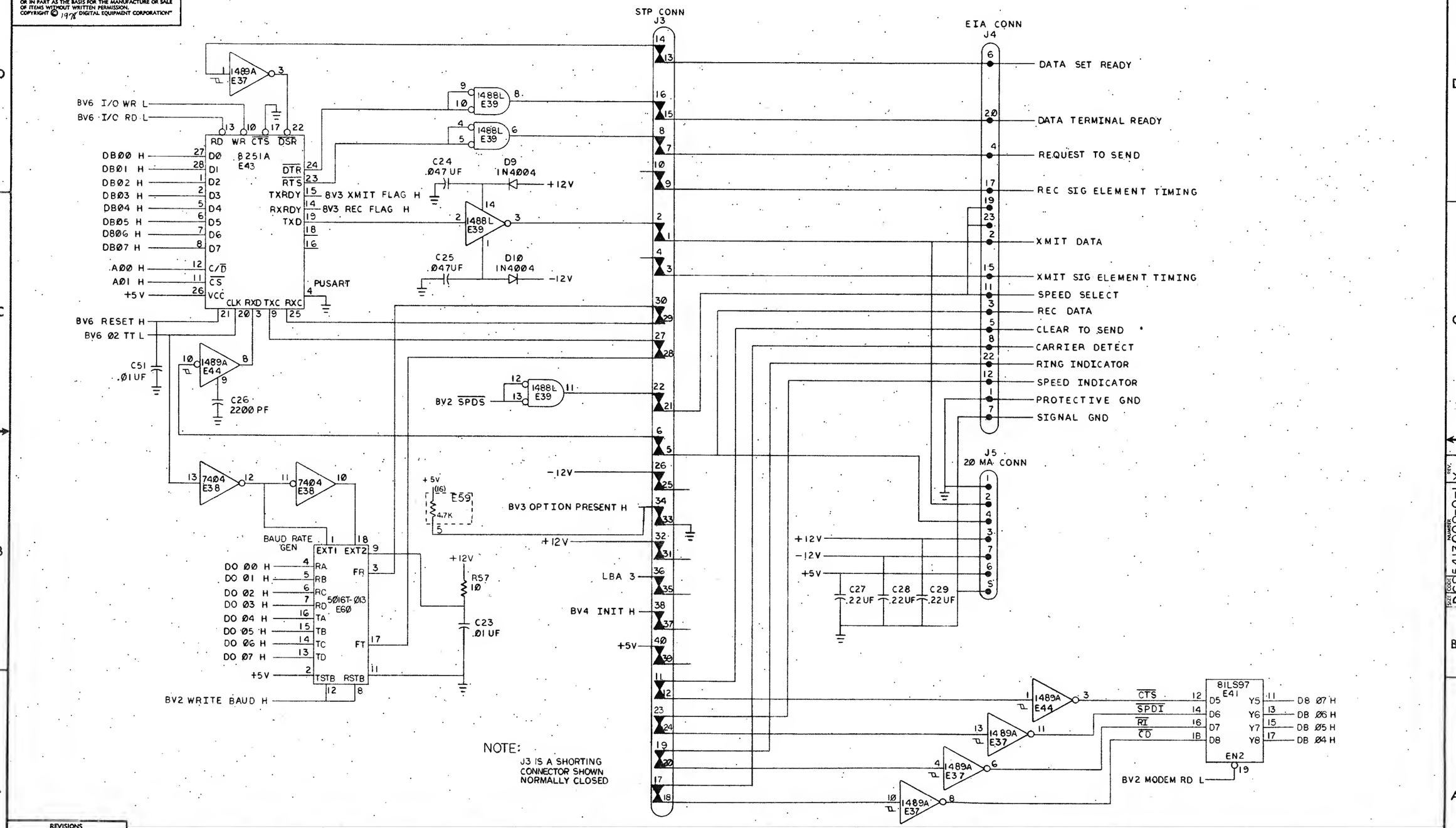

NOTE:
J3 IS A SHORTING CONNECTOR SHOWN NORMALLY CLOSED

REVISIONS		
CHK	CHANGE NO.	REV.

TITLE	SIZE	CODE	NUMBER	REV.
VT100 BASIC VIDEO (BV3)	D	CS	5413009-0-1	Y
SCALE — / —	SHEET 3 OF 6	DIST.		

DEC FORM NO. 880 130

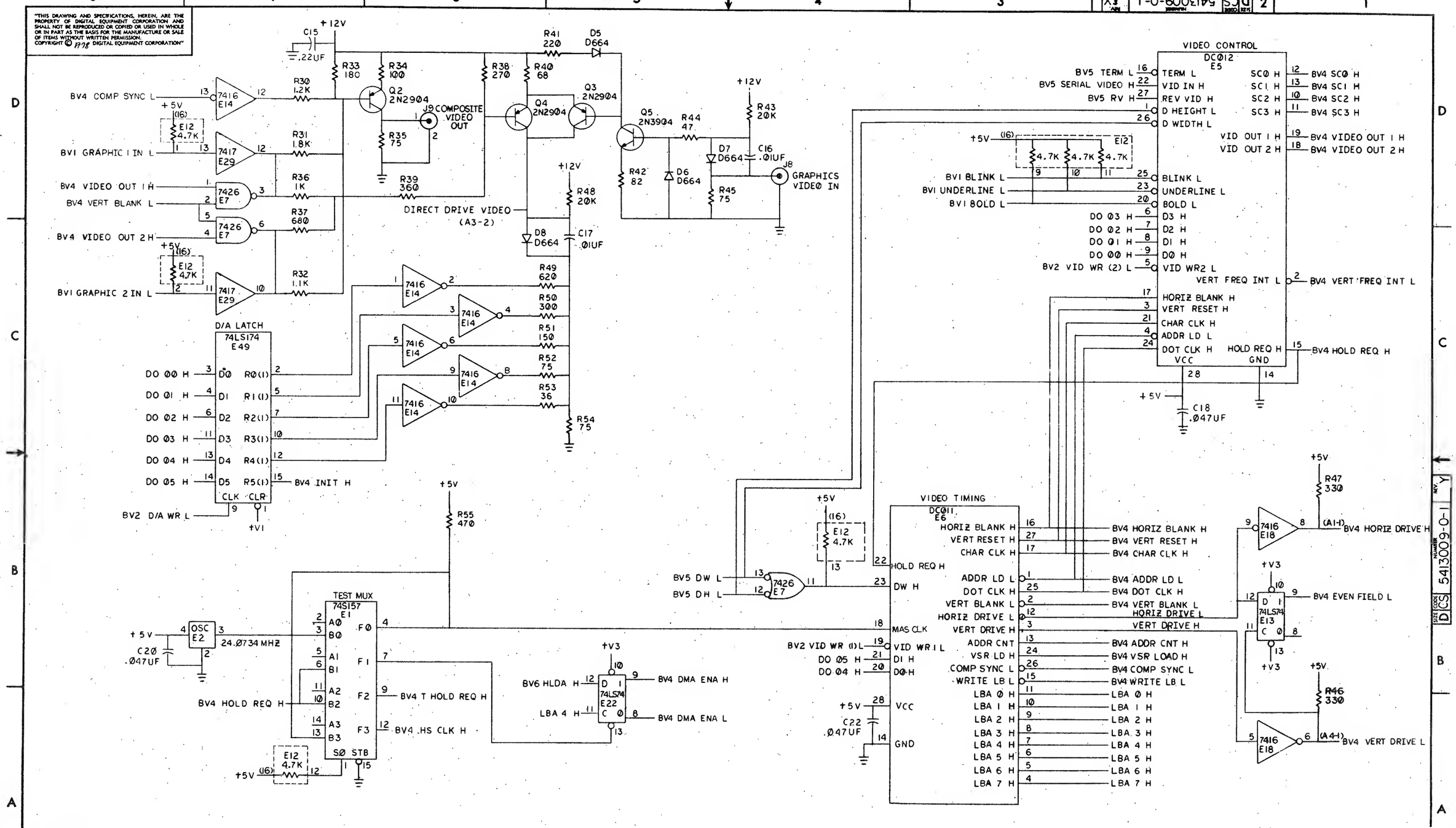

REVISIONS		
CHK	CHANGE NO.	REV.

TITLE	SIZE	CODE	NUMBER	REV.
VT100 BASIC VIDEO (BV4)	D	CS	5413009-0-1	Y
SCALE	SHEET 4 OF 6	DIST.		

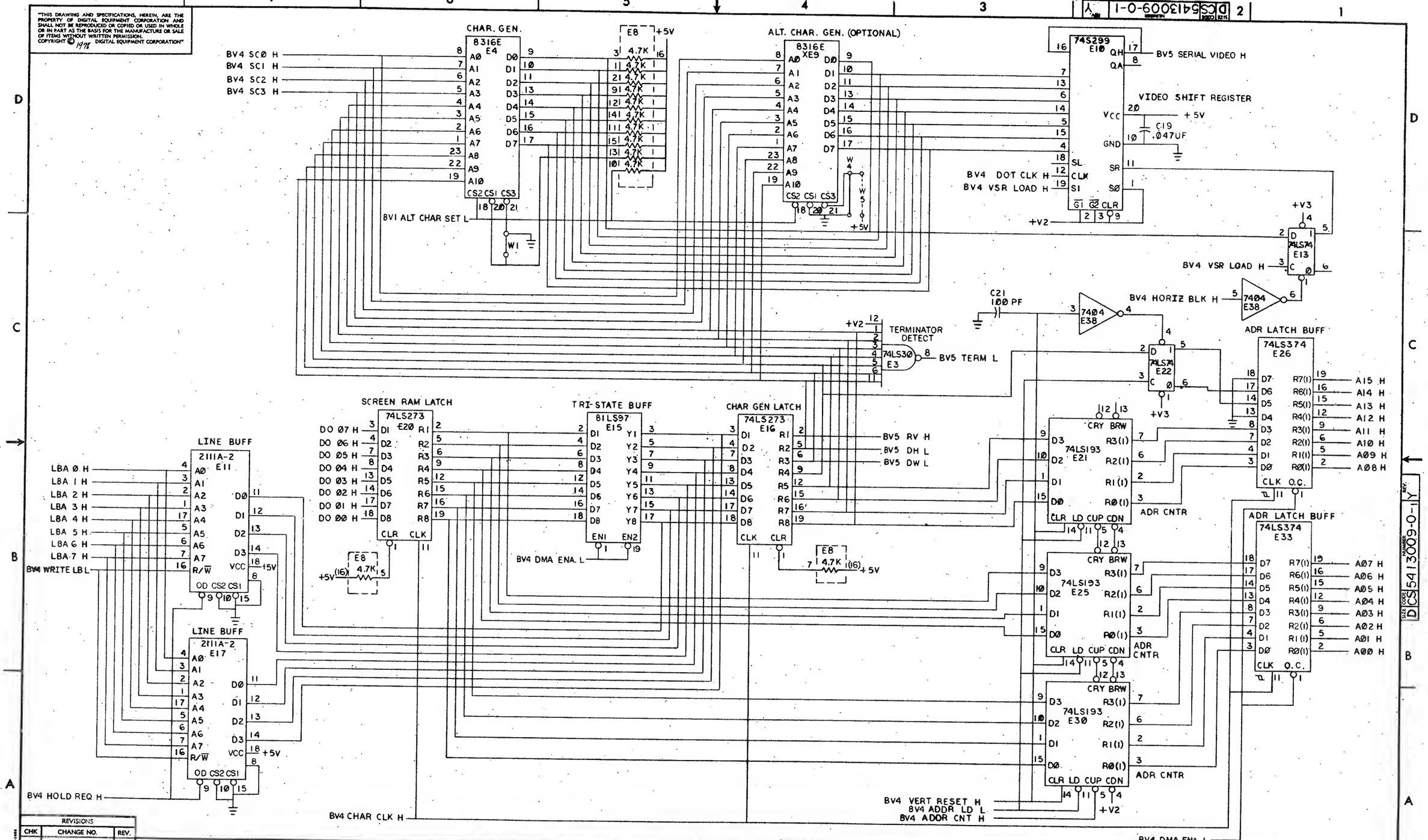

REVISIONS		
CHK	CHANGE NO.	REV.

TITLE	SIZE	CODE	NUMBER	REV.
VT100 BASIC VIDEO (BV5)	D	CS	5413009-0-1	Y
SCALE —	SHEET 5 OF 6	DIST.		

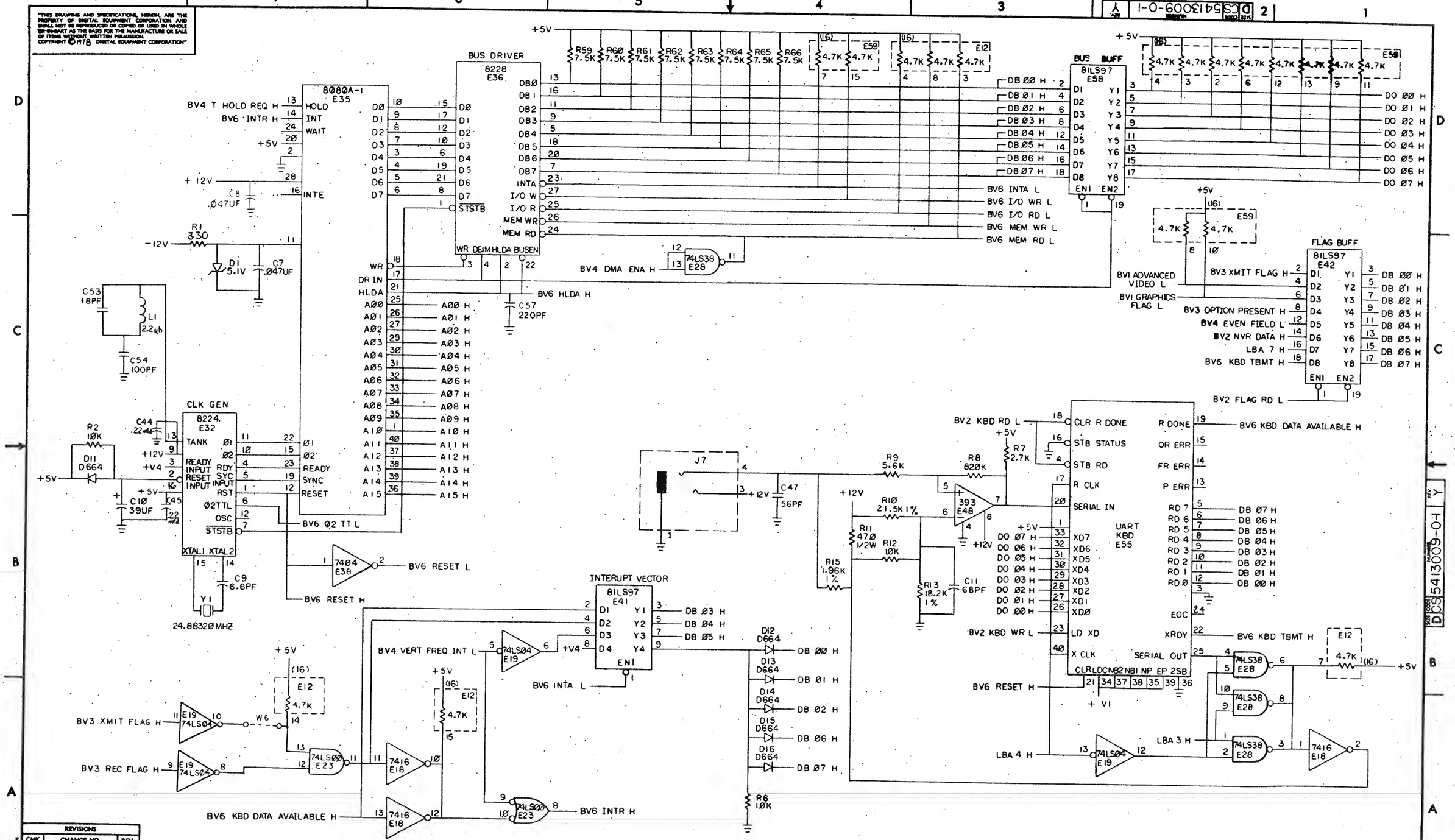

REVISIONS		
CHK	CHANGE NO.	REV.

TITLE	SIZE	CODE	NUMBER	REV.
VTIØØ BASIC VIDEO (BV6)	D	CS	5413009-0-1	Y
SCALE —/—	SHEET 6 OF 6	DIST.		

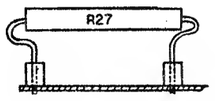

SECTION J-J

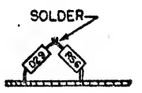

SECTION H-H

NOTES:

5. BEFORE ASSEMBLING ITEMS #82 & 83, THE NUT USED ON THESE ASSEMBLIES SHULD BE LOCKED INTO PLACE USING PERMABOND 240/240S OR LOCTITE 414.

6 MAXIMUM ALLOWABLE PROTRUSION ON SIDE TWO OF ETCH BOARD FROM BOTTOM OF ETCH BOARD TO BOTTOM OF NYLOK OR SCREW PROTRUSION IS 130 MIL.

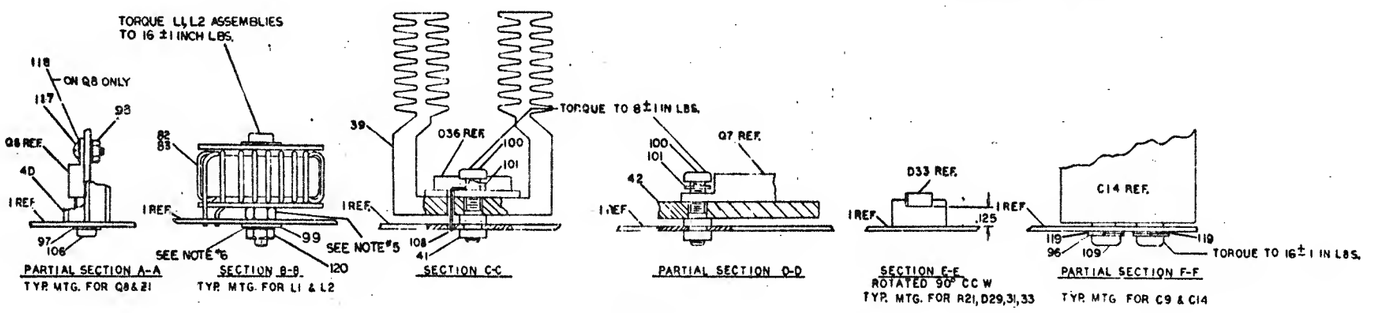

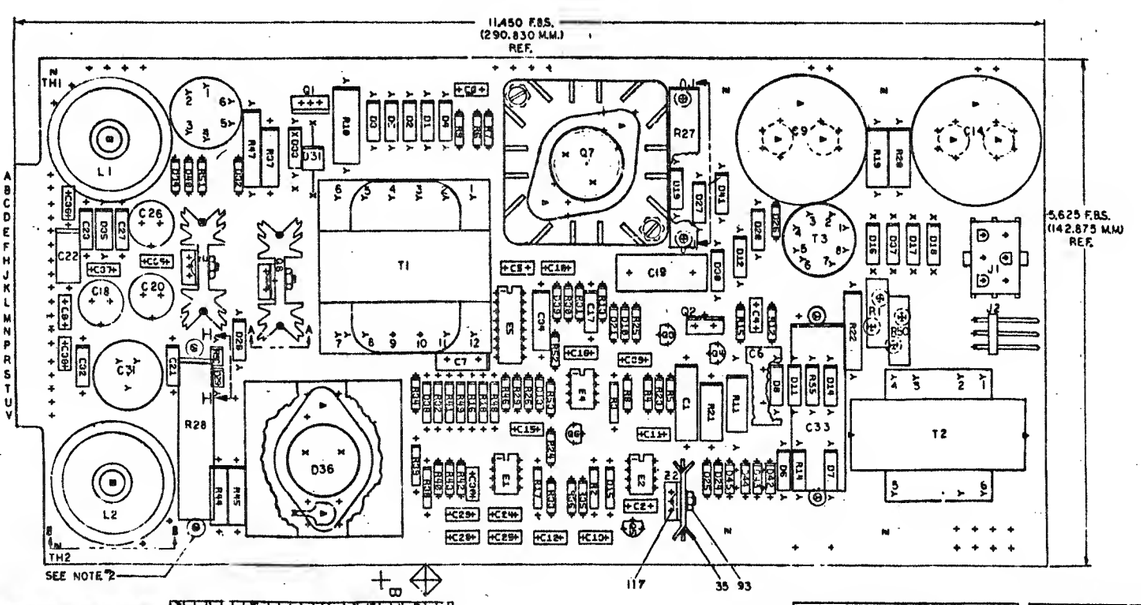

NOTES:
1. THIS BOARD REQUIRES U/L APPROVAL
2. HI-127/128 RING AND COVER MOUNTED OFF THE BOARD USING CERAMIC STAND OFFS ITEM [illegible]
3. [illegible]
4. SH. 2 & 3 ARE "D" SIZE
SEE NOTES TOP OF SHEET

SIGNATURES	DATE
DRN.	3-16-73
CHK'D	4-27
ENG.	4-27-73
PROJ. ENG.	4-27-73
PROD.	
SCALE 2/1	
SHT. 1 OF 3	
NEXT HIGHER ASSY. B-DD-5412[illegible]	

digital

TITLE H7831 POWER SUPPLY

SIZE	CODE	NUMBER	REV
E	UA	5-12396 U-0	

ETCH REV. E-17
P.C. DESIGN DATA BASE REV. C

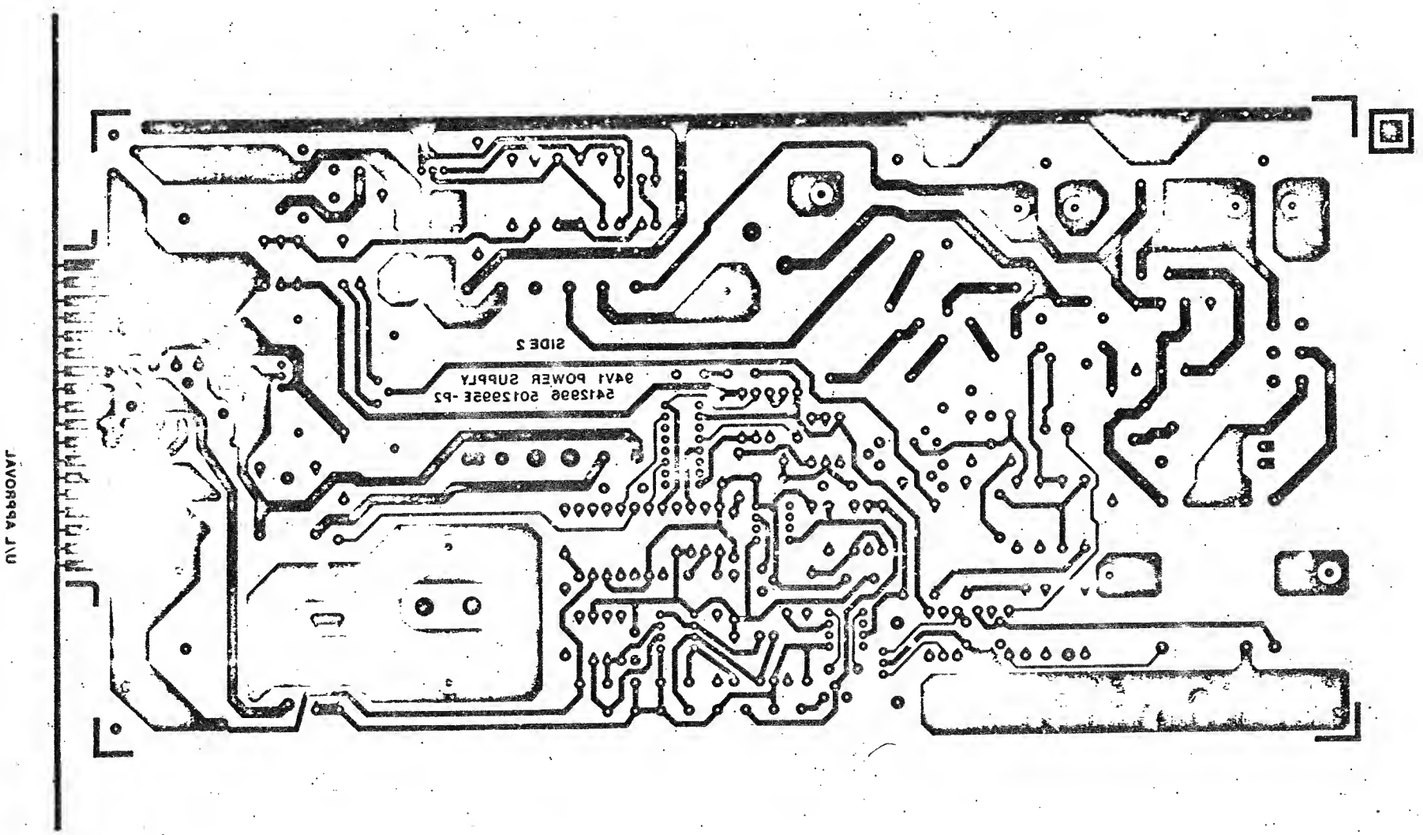

REVISIONS		
CHG	CHANGE NO	REV.

TITLE H7831 POWER SUPPLY	SIZE D	CODE UA	NUMBER 5412996-0-0	REV. N
SCALE 2/1	SHEET 2 OF 3	DIST		

D UA 5412996-0-0 N

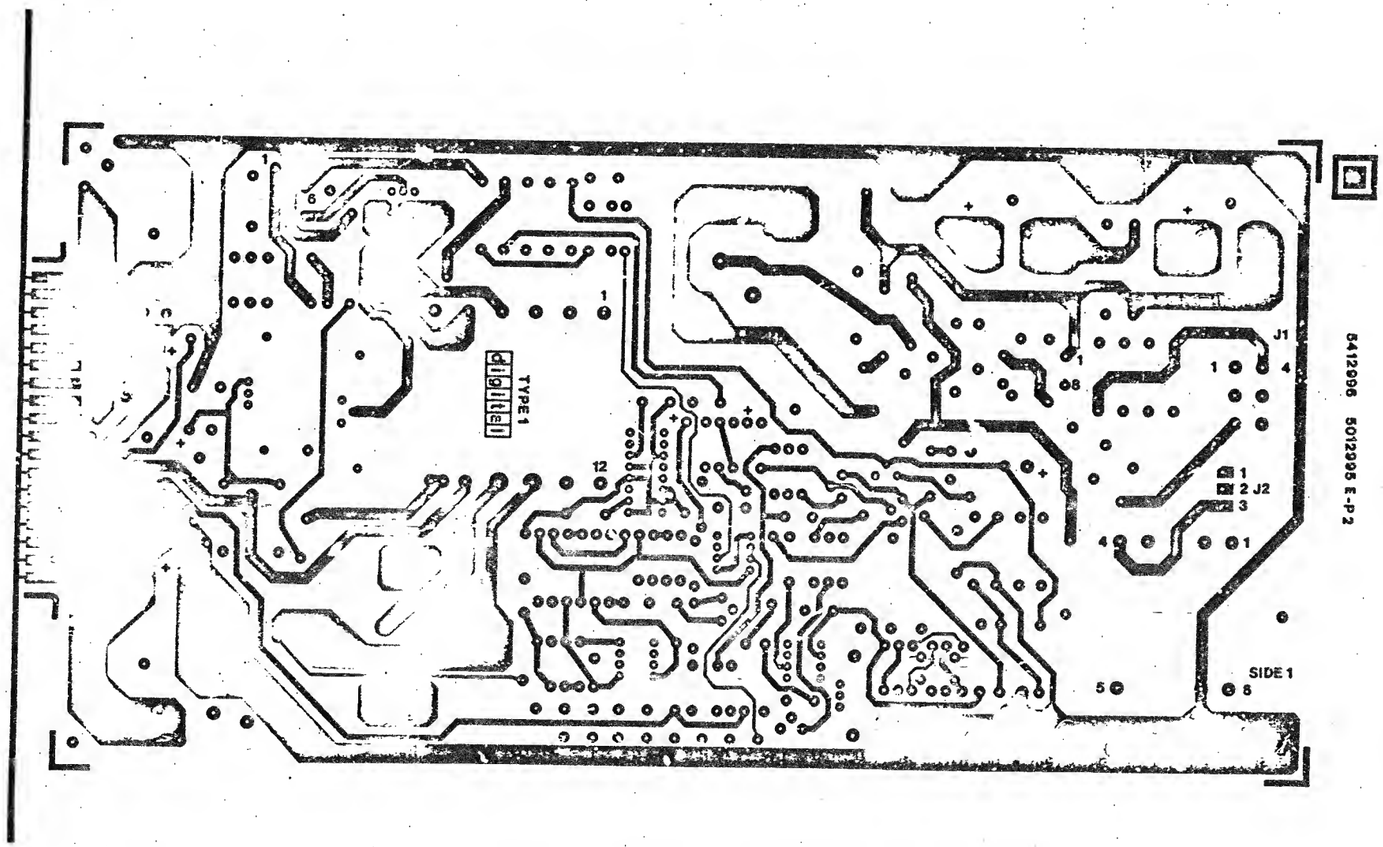

U/L APPROVAL

REVISIONS		
C-N	CHANGE NO.	REV

TITLE	SIZE	CODE	NUMBER	REV.
H7831 POWER SUPPLY	D	UA	5412996-0-0	N
SCALE 2/1	SHT 3 OF	DIST.		

D UA 5412996-0-0 N

AUTOMATED BY: FRTLST.10(11)

P A R T S L I S T

LINE	ITEM	DOCUMENT NUMBER	PART NUMBER	DESCRIPTION	QTY PER VARIATION 00	REFERENCE DESIGNATOR
1	1	E-MD-5012995-0-0	5012995-00	H7931 POWER SUPPLY	1	
2	2		1000000-00	RESISTOR,FIXED,WIRE WOUND,100W,5.200PPM,MIL	3	R5,R18,R19
3	3		1000010-00	RESISTOR,FIXED,WIRE WOUND,10W,5.200PPM,MIL	1	R1
4	4		1000016-00	RESISTOR,FIXED,WIRE WOUND,10W,5.200PPM,MIL	4	R13,R24,R25,R28,R33
5	5		1000030-00	RESISTOR,FIXED,WIRE WOUND,20W,5.200PPM,MIL	1	R34
6	6		1000050-00	RESISTOR,FIXED,WIRE WOUND,50W,5.200PPM,MIL	4	R30,R35,R36,R37,R38
7	7		1001010-00	CAPACITOR,FIXED,CERAMIC,500V,+80-20%,.25UF,MIL	1	C34
8	8		1004010-00	CAPACITOR,FIXED,ELECTROLYTIC,400V,10%,6.4UF,MIL	1	C2
9	9		1006600-00	CAPACITOR,FIXED,ELECTROLYTIC,400V,+50-10%,.4UF,MIL	1	C6
10	10		1010100-00	CAPACITOR,FIXED,ELECTROLYTIC,400V,10%,[illegible],MIL	1	C19
11	11		1010500-00	CAPACITOR,FIXED,ELECTROLYTIC,160V,10%,[illegible],MIL	1	C17
12	12		1010600-00	CAPACITOR,FIXED,ELECTROLYTIC,[illegible],MIL	1	C9
13	13		1010700-00	CAPACITOR,FIXED,ELECTROLYTIC,[illegible],MIL	4	C10,C11,C12
14	14		1010800-00	CAPACITOR,FIXED,ELECTROLYTIC,[illegible],MIL	1	C8
15	15		1010900-00	CAPACITOR,FIXED,ELECTROLYTIC,[illegible],MIL	1	C7
16	16		1011000-00	CAPACITOR,FIXED,ELECTROLYTIC,[illegible],MIL	1	C16
17	17		1011200-00	CAPACITOR,FIXED,ELECTROLYTIC,[illegible],MIL	4	C21,C23,C27,C32
18	18		1011300-00	CAPACITOR,FIXED,ELECTROLYTIC,[illegible],MIL	1	C31
19	19		1014000-00	CAPACITOR,FIXED,ELECTROLYTIC,[illegible],MIL	2	C14,C14
20	20		1014500-00	CAPACITOR,FIXED,ELECTROLYTIC,[illegible],MIL	1	C36
21	21		1014993-00	CAPACITOR,FIXED,ELECTROLYTIC,[illegible],MIL	1	C10
22	22		1100114-00	GS\[illegible]CB PIV=[illegible]	5	D18,D22,D42,D31
23	23		1105798-00	PIV=[illegible] I=[illegible]	5	D32,D34,D24,D28,D42-D45
24	24		1105873-00	PIV=[illegible] I=[illegible]	1	D38
25	25		1105991-01	PIV=[illegible] I=[illegible]	1	D15
26	26		1112594-01	RA\[illegible] PIV=200 I=30A	1	D31
27	27		1112595-00	RA\[illegible] PIV=200 I=30A	8	D1,D2,D3,D5,D19,D41,D20
28	28		1112596-01	RA\[illegible] PIV=200 I=30A	6	D4,D6,D7,D8,D11,D14
29	29		1112597-00	RA\[illegible] PIV=200 I=30A	1	D27,D28
30	30		1112598-00	RA\[illegible] PIV=500 I=30A	1	D36
31	31		1115529-00	UES2801 PIV=50V I=30A	1	

REVISION HISTORY			BASIC PART NO: 5412996											
ENG	ECO NUMBER	REV	SECTION A OF A											
	INIT	B	SECTION VARIATION INDEX											
	[illegible]	C	[A] 00											
	[illegible]	D	[B]											
	[illegible]	E	[C]											
	[illegible]	F	[D]											
	[illegible]	G	[E]											
	[illegible]	H	[F]											
	5412996-MLD06	J	[G]											
	[illegible]	K	[H]											
	[illegible]-5412996	L	[J]											
	[illegible]	M	[K]											
	[illegible]	N	[L]											
	[illegible]	P	[M]											
	[illegible]	R	[N]											

DRN:	VIN PARSCHANIAN	DATE: 2-SE-78		D	I	G	I	T	A	L		
CHK'D:	KENT GLEEZEN	DATE: 7-JUL-80	TITLE PARTS LIST									
DES.ENG:	BOB PEDERSEN	DATE: 7-JUN-78	H7931 POWER SUPPLY									
RESP.ENG.:	BOB PENDERSON	DATE: 7-JUN-78	DOCUMENT NUMBER									
MFG.ENG.:	T. CORCIARI	DATE: 7-JUN-78	SIZE K	CODE PL	NUMBER 5412996-0-DBF						REV R	
ASSEMBLY NUMBER: E-CA-5412996-0-0		TOP DOCUMENT NUMBER: E-DD-5412996-0-0			FILE NAME: Z108ER.PLS						EDIT # 43	

AUTOMATED BY PRTLST.ID(11)

P A R T S L I S T

LINE	ITEM	DOCUMENT NUMBER	PART NUMBER	DESCRIPTION	QTY PER VARIATION CD	REFERENCE DESIGNATOR
001	001		1114502-00	UES1302 PIV=100V I= HA	2	D29,D33
002	002		1115118-00	PIV=800V I=1A	6	D16,D38
003	003		1115118-00	PIV=800V I=1A	6	D12,D18,D18,D37
004	004		1115118-00	PIV=800V I=1A	1	D39
005	005		1115118-00	1N 5626 PIV=800V I=1A	1	D35
006	006		1115118-00	VOLT.TRANS.COMPRESS 12.1	1	
007	007		1115118-00	HEAT SINK TO-220.VERTICAL MNT	1	
008	008		1115118-00	HEADER 1X1 .3PRG/R.ANGLE	1	J3
009	009		1115118-00	MATE-N-LOK 8PIN UNIV HEADER	1	J1
010	010		1115118-00	HEAT SINK	1	
011	011		1211399-00	HEAT SINK TAB MNT SEMI 2.5" HIGH	1	
012	012		1213391-00	INSERT.THREADED 6-32 .3RA55.ELEC	1	
013	013		1214795-00	HT SINK W HOLES	1	
014	014		1215001-00	69.0 .25W W10.0 % CC	2	R9,R12
015	015		1300219-00	100.0 .25W W10.0 % CC	1	R14
016	016		1300249-00	220.0 .25W W10.0 % CC	1	R6
017	017		1300271-00	270.0 2.0 W10.0 % CC	1	R10
018	018		1300286-00	470.0 .25W W5.0 % CC	3	R13,R45
019	019		1300316-00	1.0 K .25W W5.0 % CC	3	R22,R35,R40
020	020		1300332-00	1.200 K .25W W5.0 % CC	1	R26
021	021		1300344-00	2.700 K .25W W5.0 % CC	1	R03
022	022		1300360-00	10.0 K .25W W5.0 % CC	1	R4
023	023		1300394-00	15.0 K .25W W5.0 % CC	1	R24
024	024		1300406-00	100.0 K 1.0W W10.0 % CC	2	R19,R50
025	025		1300539-00	100.0 .25W W10.0 % CC	1	Q4,Q7,P25
026	026		1300613-00	330.0 .25W W10.0 % CC	2	R30,R51
027	027		1300617-00	390.0 K .25W W10.0 % CC	1	R31
028	028		1300621-00	4.0 K .25W W10.0 % CC	1	R52
029	029		1300677-00	10.0 K .25W W10.0 % CC	1	R33
030	030		1300696-00	560.0 .25W W10.0 % CC	1	R5
031	031		1300739-00	820.0 .25W W10.0 % CC	1	R3
032	032		1303187-00	1.5 .25W W1.0 % RN55D-F10	1	R32,R41,R46,R49
033	033		1304533-00	5.11 .25W W1.0 % RN55D-F10	1	R16
034	034		1304541-00	1.62 .25W W1.0 % RN55D-F10	1	R15
035	035		1304600-00	1.40 .25W W1.0 % RN55D-F10	1	R36
036	036		1304616-00	1.47 K .25W W1.0 % RN55D-F10	1	R35
037	037		1304624-00	5.10 .25W W1.0 % CC	3	R40,R42
038	038		1305599-00	1.0 M .25W W10.0 % MM	1	R20
039	039		1310180-00	300.0 10.0 W10.0 % MM	3	R21,R11
040	040		1311398-00	500.0 3.0 W10.0 % MM	1	R17
041	041		1305339-00	200.0 K .125W W1.0 % RN55D-F10	3	R37,R44,R48
042	042		1313014-00	.01 3.0 W10.0 % MM	1	R27
043	043		1314785-00	500.0 13.0 W10.0 % MM	1	R18
044	044		1313341-00	6.36 K .125W W1.0 % RN55D-F10	1	R1,R50
045	045		1314210-00	6.0 15.0 % NTC THERM	2	R28,R47
046	046		1314350-00	1.0 .50W W10.0 % CC TUBULAR	2	Q3,Q6
047	047		1610700-00	XD 05 NPN 500MW 60V 0.5 CC P	2	Q5,Q8
048	048		1610706-00	XD 08 PNP 500MW 60V 0.5 CC P	2	Q9,Q7
049	049		1610910-00	2N 6247 NPN 10-3	3	Q1,Q2,Q8
050	050		1614871-00	2N 4401 NPN 31W SI	1	Q3
051	051		1614873-00	PULSE XFMR.4 WOUND	1	T3

D	I	G	I	T	A	L	TITLE	SECTION A OF A	SIZE	CODE	DOCUMENT NUMBER	REV
							H7931 POWER SUPPLY		K	PL	5415995-0-03F	R

AUTOMATED BY PRTLST.1C(11) PARTS LIST SHEET A3 OF A3

LINE	ITEM	DOCUMENT NUMBER	PART NUMBER	DESCRIPTION	QTY PER VARIATION 00	REFERENCE DESIGNATOR
[illegible]	[illegible]		1614273-00	PULSE XFMR,TSI-[illegible]	1	[illegible]
[illegible]	[illegible]		1615251-00	[illegible]	1	[illegible]
[illegible]	[illegible]		[illegible]	XFMR [illegible]	1	[illegible]
[illegible]	[illegible]		[illegible]	XFMR [illegible]	1	[illegible]
[illegible]	[illegible]		[illegible]	DEC [illegible]	1	[illegible]
[illegible]	[illegible]		[illegible]	LM [illegible]	1	[illegible]
[illegible]	[illegible]		9006172-00	NUT,[illegible]	[illegible]	
[illegible]	[illegible]		9007793-01	[illegible]	[illegible]	
[illegible]	[illegible]		9007901-00	[illegible]	[illegible]	
[illegible]	[illegible]		9009798-00	[illegible]	[illegible]	
[illegible]	[illegible]		1001765-00	[illegible]	[illegible]	
[illegible]	[illegible]		9006010-00	[illegible]	[illegible]	
[illegible]	121		[illegible]	E70.0 [illegible]	1	[illegible]
[illegible]	[illegible]		131195-00	.50 3.0 [illegible] 1.0 % NW	1	[illegible]

1?? NOTE: SEE ?-??-5412996-0-0 FOR ADDITIONAL INSERTION INFORMATION
1?? NOTE: USE 1312191-00 UNTIL EXISTING STOCK HAS BEEN DEPLET.D THEN USE 1317917-00.

D	I	G	I	T	A	L	TITLE H7931 POWER SUPPLY	SECTION A OF A	SIZE K	CODE PL	DOCUMENT NUMBER 5412996-0-03P	REV R

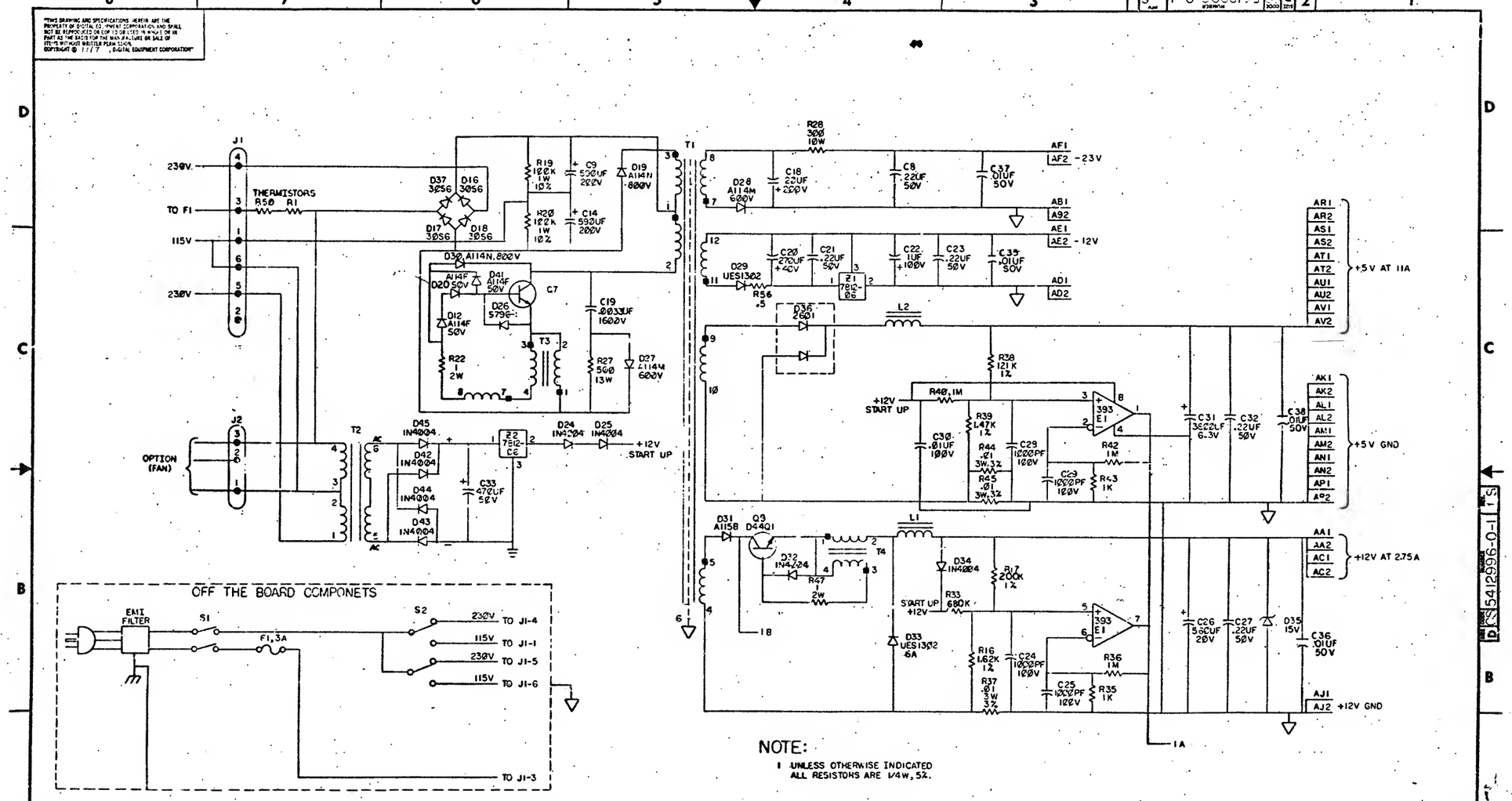

NOTE:

1 UNLESS OTHERWISE INDICATED ALL RESISTORS ARE 1/4W, 5%.

REVISIONS			
CHK	CHANGE NO	REV	
	5412296-FN001	C	J. BITTO
	5412296-FN002	E	J. BITTO
	5412296-FN004	F	J. BITTO
	5412296-FN006	H	E. JAMES
	5412296-ML002	J	G. CHRISTIANSEN
	5412296-ML003	K	G. CHRISTIANSEN
	5412296-MLO01	L	G. CHRISTIANSEN
	5412996-ML014	N	D. MOORE
	5412296-ML015	P	G. CHRISTIANSEN
	5412296-ML016	R	G. CHRISTIANSEN
	5412296-ML017	S	D. ST. SAUVEUR

DRN.		FIRST USED ON H7831
CHK'D		digital
ENG.		TITLE H7831 POWER SUPPLY
PROJ. ENG.		
PROD.		
NEXT HIGHER ASSY.	B-DD-5412296-0	SIZE D CODE NUMBER 5412996-0-1 REV. S
SCALE		
SHEET 1 OF 2		DIST.

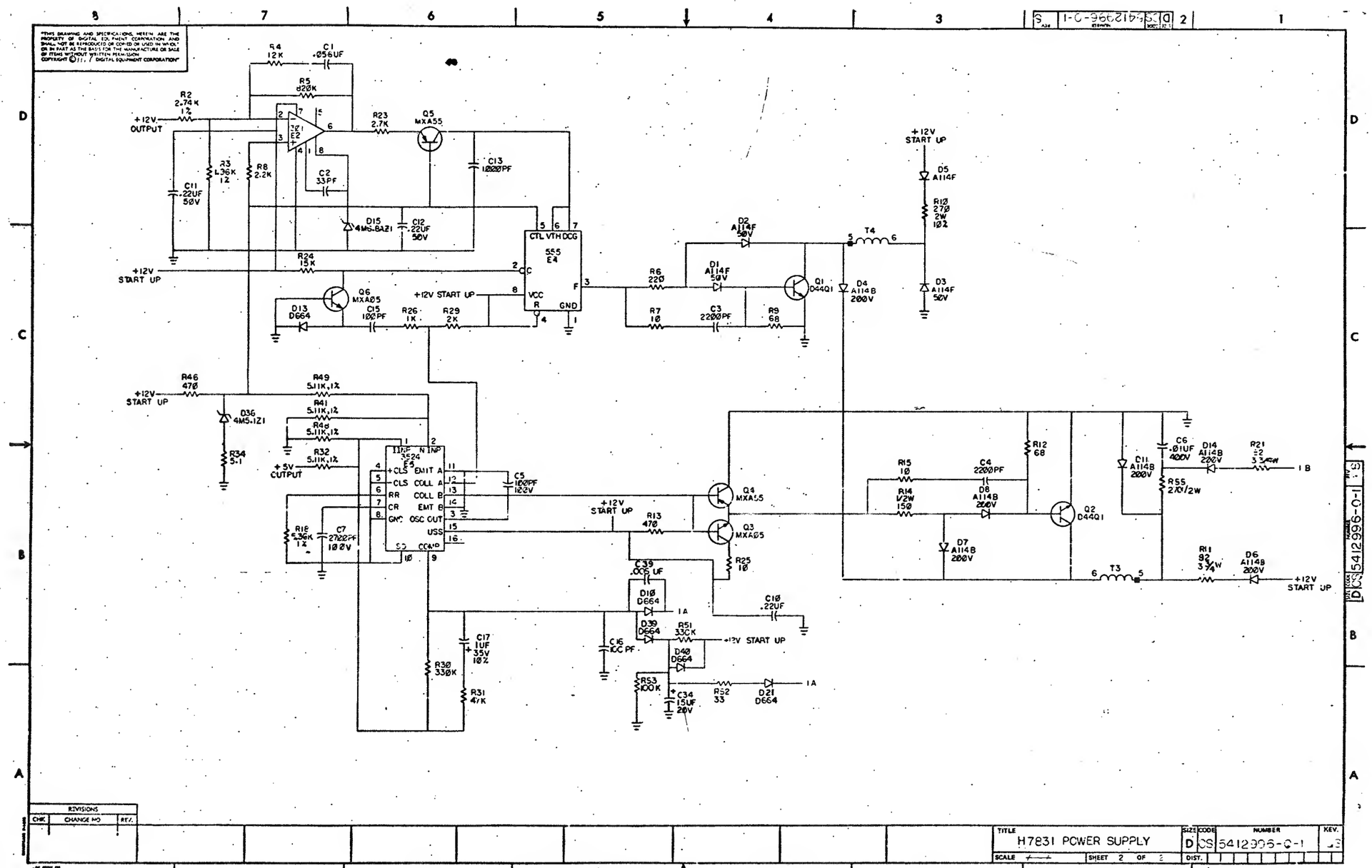
R4 12K
C1 .056UF
R5 820K
R2 2.74K 1%
+12V OUTPUT
R23 2.7K
Q5 MXA55
C13 1000PF
R3 4.36K 1%
R8 2.2K
C2 33PF
C11 .22UF 50V
D15 4MS-8A21
C12 .22UF 50V
R24 15K
+12V START UP
Q6 MXA05
D13 D664
C15 100PF
R26 1K
R29 2K
CTL VTH DCG
555 E4
VCC
R
GND
+12V START UP
R6 220
R7 10
C3 2200PF
R9 68
D2 A114F 50V
D1 A114F 50V
Q1 D44Q1
D4 A114B 200V
T4
+12V START UP
D5 A114F
R10 270 2W 10%
D3 A114F 50V
R46 470
+12V START UP
D36 4MS-121
R34 5.1
R49 5.11K,1%
R41 5.11K,1%
R40 5.11K,1%
R32 5.11K,1%
+5V OUTPUT
11NF N INP
3524 E5
+CLS EMIT A
CLS COLL A
RR COLL B
CR EMT B
GND OSC OUT
USS
SD COMP
C5 100PF 100V
R18 5.36K 1%
C7 2700PF 100V
+12V START UP
R13 470
Q4 MXA55
Q3 MXA05
R25 10
C39 .005 UF
D10 D664
C10 .22UF
D39 D664
R51 330K
+12V START UP
C16 100 PF
D40 D664
R53 100K
C34 15UF 20V
R52 33
D21 D664
C17 1UF 35V 10%
R30 330K
R31 47K
R15 10
R14 1/2W 150
C4 2200PF
D8 A114B 200V
D7 A114B 200V
R12 68
Q2 D44Q1
C11 A114B 200V
C6 .01UF 400V
D14 A114B 200V
R21 22 3/4W
R55 270/2W
R11 82 3/4W
D6 A114B 200V
T3
+12V START UP
REVISIONS
CHK
CHANGE NO
REV.
TITLE
H7831 POWER SUPPLY
SIZE D
CODE CS
NUMBER 5412996-0-1
REV.
SCALE
SHEET 2 OF 2
DIST.

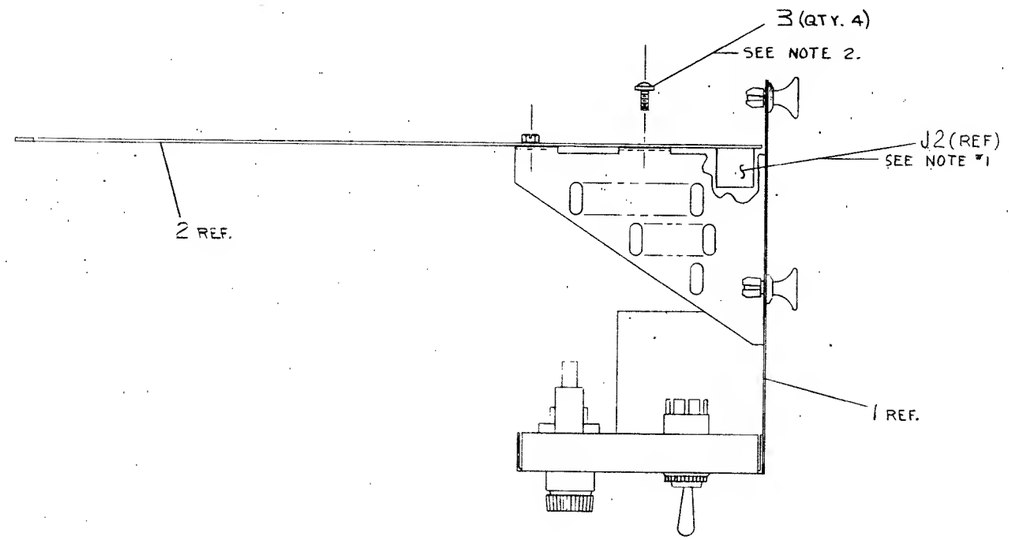

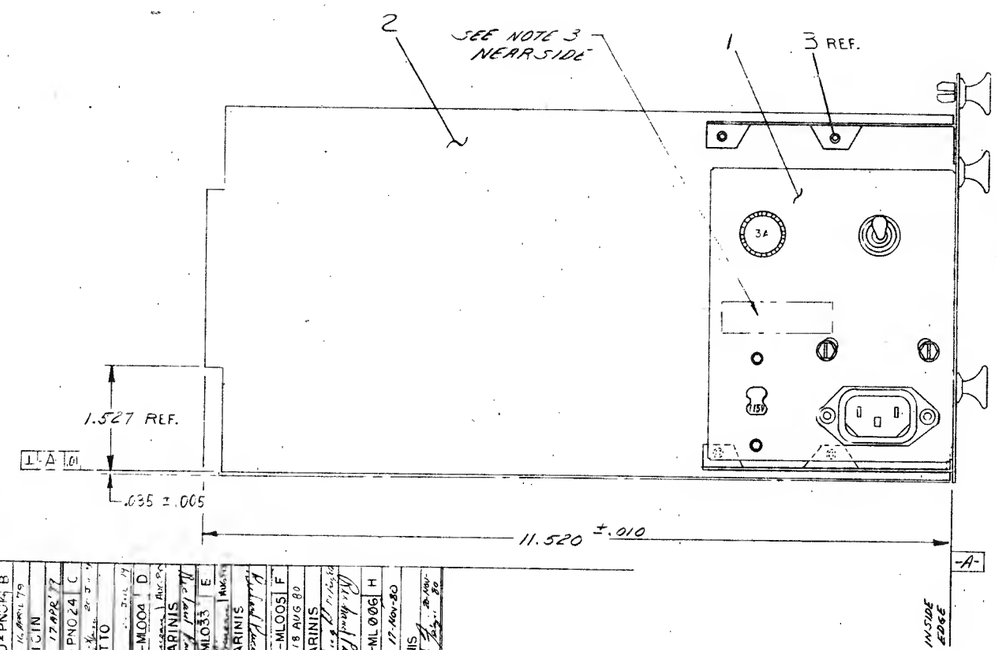

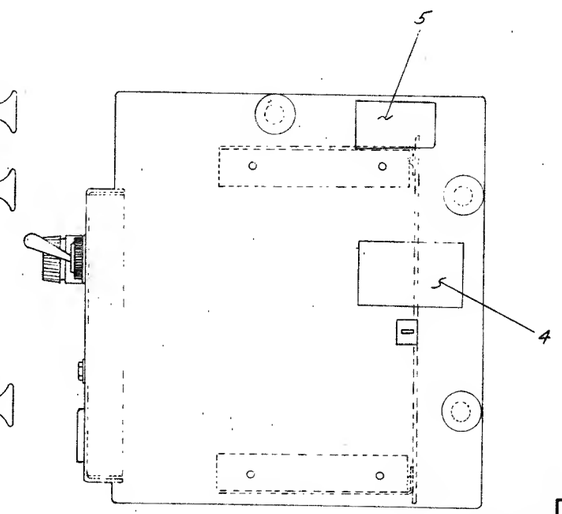

NOTES:

1. CONNECT PLUG FROM ITEM 1 (7015053-0-0) TO J2 ON ITEM 2 (5412996).
2. INSTALL ITEM 3 AS SHOWN, TYP. 4 PLACES.
3. IDENTIFICATION: STAMP USING 1/8" CHARACTER HEIGHT AS INDICATED BELOW TO HIGHEST LEVEL OF SUBASSEMBLY SPECIFIED ON PURCHASE ORDER AND LOCATE APPROX. AS SHOWN ON DRAWING.
   A.) PART NUMBER
   B.) REVISION
   C.) VENDOR IDENTIFICATION.
4. LOCATE ITEM NO. 4 & 5 APPROX AS SHOWN.
5. ADD CSA LABEL 3613211-01 FOR ALL FAR EAST BUILT UNITS AS DIRECTED BY CORPORATE PRODUCT SAFETY. LABEL TO BE LOCATED UNDER SERIAL LABEL.
6. FOR INDIVIDUAL FIELD SERVICE OR CUSTOMER SPARES SHIPMENTS USE PACKAGING INSTRUCTIONS A-SP-3700552-0-0; FOR BULK INTERPLANT SHIPMENTS USE PACKAGING INSTRUCTION A-SP-3700437-0-0 VARIATION - ØØ

CAUTION: OFF SHEET PARTS LIST EXIST.
REFER TO K-PL-7014979-0-DBP

REVISIONS				
CHK	CHANGE NO.	REV.		
	7014979-ML008	A		
	VT100-PN009	B		
	VT100-PN024	C	J. BITTO	
	7014979-ML004	D	J DEMARINIS	
	VT100-ML033	E	J DEMARINIS	
	7014979-ML005	F	J DEMARINIS	
	7014979-ML006	H	J. DEMARINIS	

MASTERFACE P-1484
DEC FORM NO. DRB 106-C

THIRD ANGLE PROJECTION	DESCRIPTION	DWG./PART NO.	ITEM NO.
	UNLESS OTHERWISE SPECIFIED DIMENSIONS ARE IN INCHES		
QUANTITY & VARIATION	ANGLES ±0° 30'	CLASS OF ACCURACY (CHECK ONE)	NOMINAL DIMENSION RANGE INCHES: OVER 0 TO 0.2; OVER 0.2 TO 1.2; OVER 1.2 TO 4.0; OVER 4.0 TO 12.0; OVER 12.0 TO 40.0; OVER 40.0 TO 80.0
	SURFACE QUALITY IN MICROINCHES	MEDIUM ☐	±.004; ±.008; ±.012; ±.018; ±.024; ±.04
		PREFERRED ☐	±.012; ±.016; ±.025; ±.04; ±.063; ±0.1
REMOVE BURRS AND BREAK SHARP CORNERS	DRN. D. Bourbeau 9 SEP 77	FIRST USED ON VT1ØØ	digital
DO NOT SCALE DWG	CHK'D J. Fabjanski 20 DEC 77	TITLE POWER SUPPLY ASSY.	
	ENG. 20 DEC 77		
MATERIAL SEE PARTS LIST	PROJ. ENG. 17 OCT 77		
FINISH	PROD. 5-9-78		
	NEXT HIGHER ASSY. E-UA-VT1ØØ-Ø-Ø	SIZE D / CODE AD / NUMBER 7014979-0-0	REV. H
	SCALE 1/1		
	SHEET 1 OF 1	DIST.	

1 ML

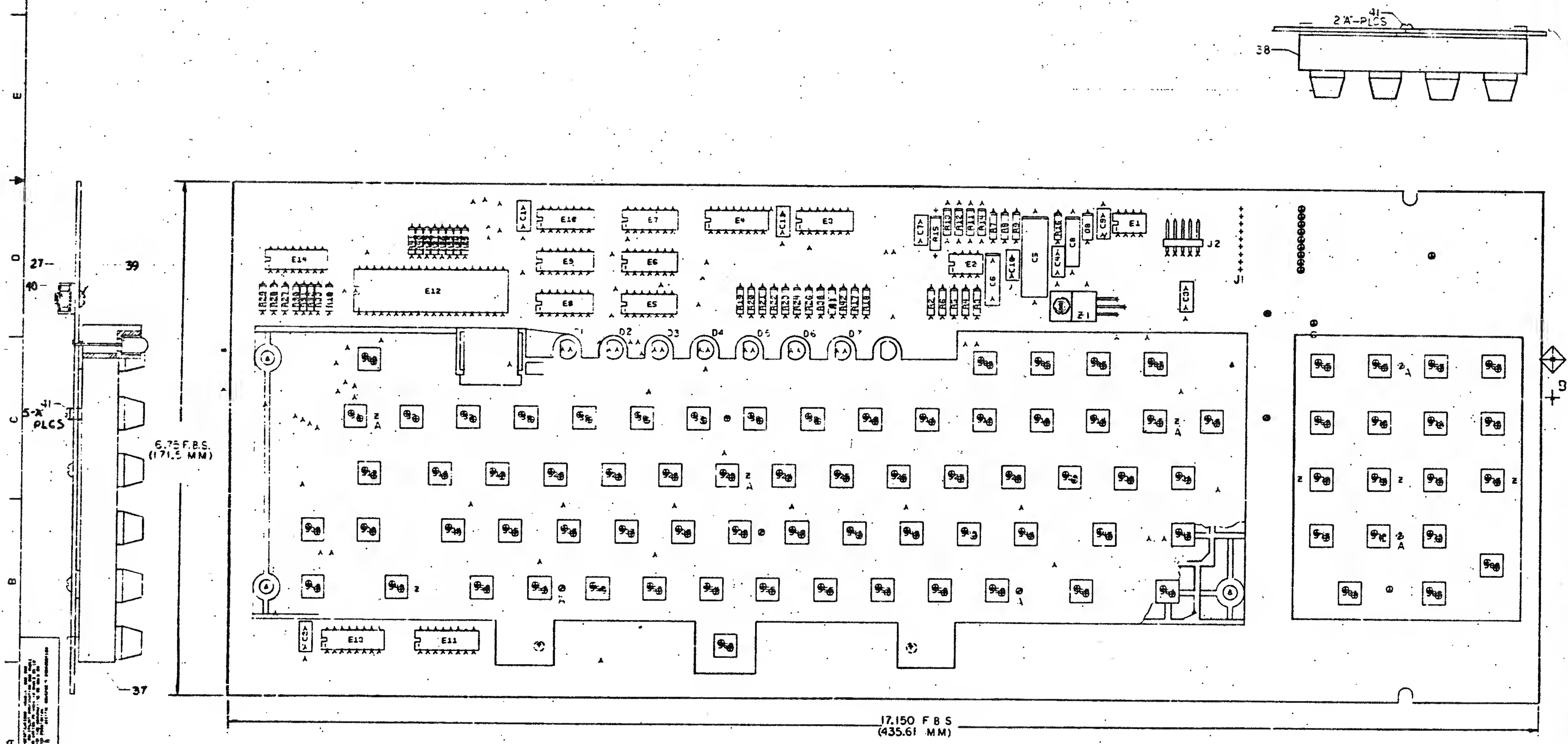

digital
TITLE LK07 KEYBOARD

SIGNATURES	DATE
DRN.	
CHK'D.	
ENG.	
PROJ. ENG.	
PROD.	

SIZE E
CODE UA
NUMBER 5413404-0-0
REV C
SCALE 2/1
SHT. 1 OF 3
NEXT HIGHER ASSY. B-DD-5413404-0-0

ETCH REV.
P.C. DESIGN DATA BASE REV.

CHG	CHANGE NO	REV
	ML 001	B
	REVISED	
	E+H PANCHOLIS	
	1282	C

NOTES:
1. SCREWS SECURING KEY ARRAY TO PCB ARE FOR MFG. PURPOSES ONLY. INSTALL SCREWS AS REQUIRED. QTY OF 7 IS FOR REF. ONLY.
2. FLAT SIDE OF LED TO FACE THE FLAT SIDE IN KEY ARRAY MOUNTING HOLE.

E UA 5413404-0-0 C

5413404
5013403C-PI L1

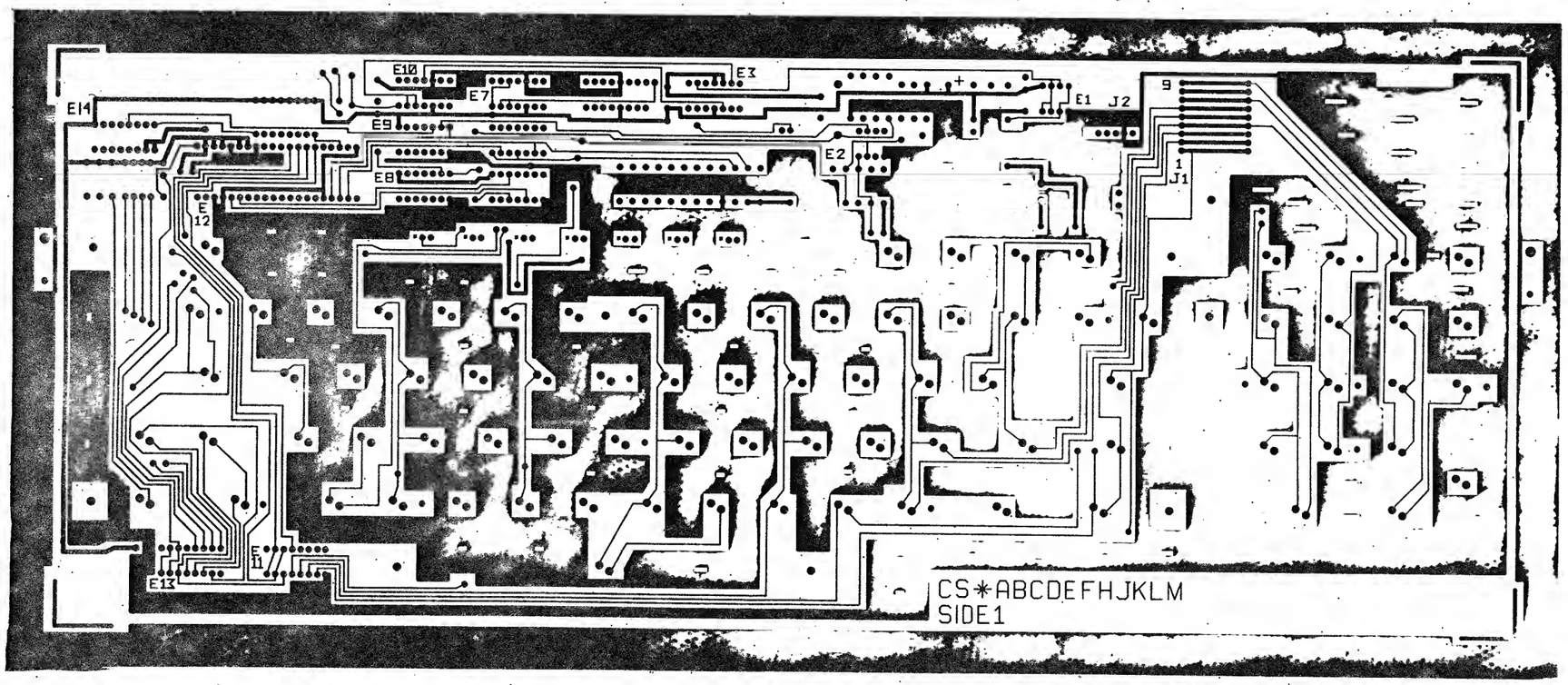

REVISIONS		
CHK	CHANGE NO.	REV.

TITLE	SIZE	NO.	SHEET OF	DRAWING	
LK07 KEYBOARD	E	UA	5413404-0-0		C.

SCALE 2:1 2 OF 3

UA 5413404-0-0 C

L2

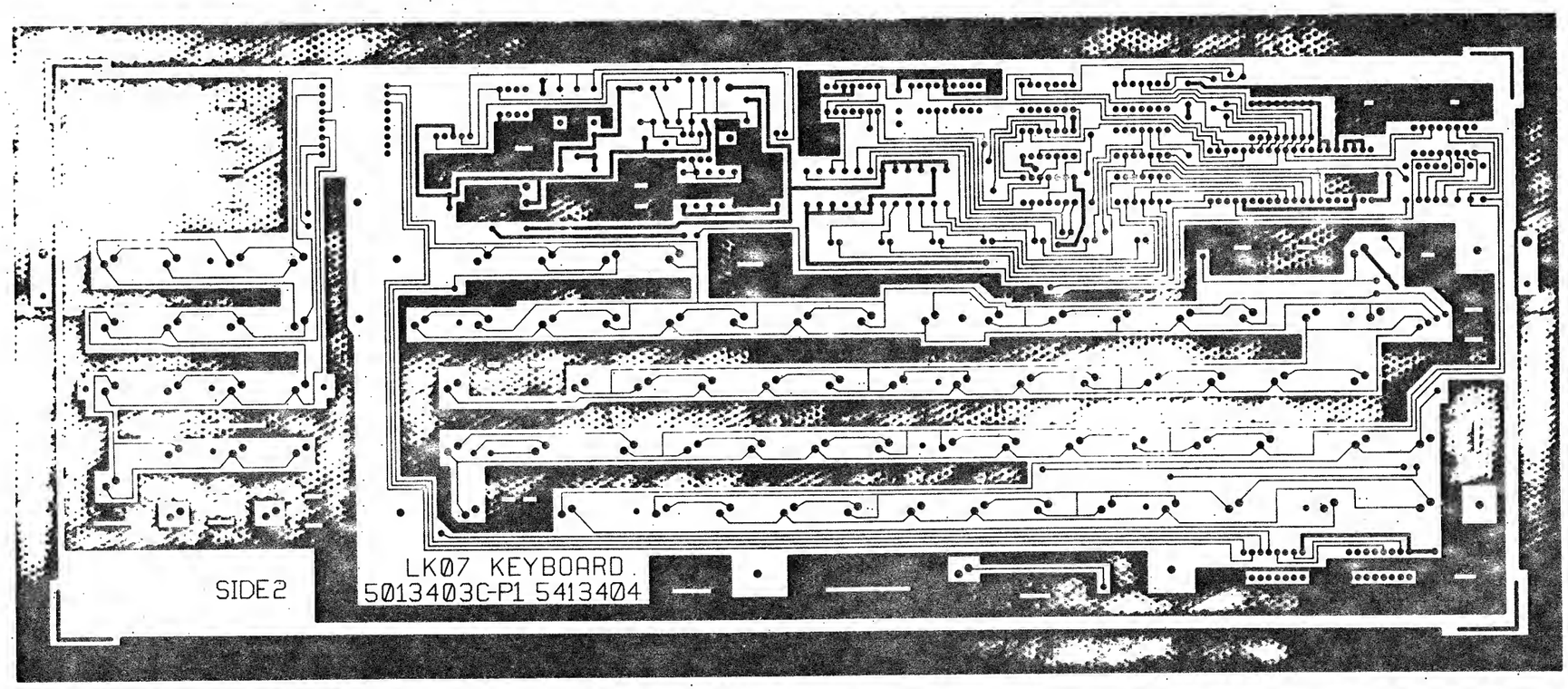

REVISIONS		
CHK	CHANGE NO.	REV

TITLE	SIZE	CODE	NUMBER	REV.
LK07 KEYBOARD	E	UA	5413404-0-0	C
SCALE 2:1 SHEET 3 OF 3	DIST.			

AUTOMATED BY PRTLST.3L(34)

P A R T S L I S T

LINE	ITEM	DOCUMENT NUMBER	PART NUMBER	DESCRIPTION	QTY PER VARIATION 00	REFERENCE DESIGNATOR
1	1	D-MD-5013403-0-0	5013403-00	DRILL & ETCH DRAWING	1	
2	2		1000014-00	68.0 MMF 100V 5%200PPM DM15S	1	C7
3	3		1000075-00	25 MFD 25V G% 30D AL EL	1	C5
4	4		1001634-00	1600.0 MMF 100V 5%200PPM DM02S	1	C6
5	5		1005306-00	6.8MFD 35V 10% S.TANT	1	C8
6	6		1012784-00	.047 MFD 50V -20+80 CER	6	C1,C2,C4,C9-C11
7	7		1105275-00	D 672 TR= 15NS PIV= 60V SI	1	D8
8	8		1110324-01	LED 1MCD@10MA PIV=3 .750 MIN. LE	7	D1-D7
9	9		1215048-00	CONN 5POS RT ANGLE	1	J2
10	10		1300309-00	390.0 .25 W 5.0 % CC	2	R16,R42
11	11		1300315-00	470.0 .50 W 5.0 % CC	1	R15
12	12		1300365-00	1.0 K .25 W 5.0 % CC	6	R10,R19,R21-R24
13	13		1300439-00	3.30 K .25 W 5.0 % CC	9	R26-R33,R38
14	14		1300479-00	10.0 K .25 W 5.0 % CC	11	R2,R3,R17,R25,R34-R37,R39-R41
15	15		1301401-00	750.0 .25 W 5.0 % CC	1	R1
16	16		1301425-00	300.0 .25 W 5.0 % CC	2	R18,R20
17	17		1301874-00	5.60 K .25 W 5.0 % CC	3	R5,R7,R9
18	18		1302391-00	20.0 K .25 W 5.0 % CC	2	R4,R6
19	19		1303155-00	21.5 K 1/4W 1% RN55D-F 100PPM	1	R12
20	20		1303187-00	820.0 K .25 W 5.0 % CC	1	R8
21	21		1303312-00	10.0 K 1/4W 1% RN55D-F 100PPM	1	R11
22	22		1304833-00	1.96 K .25 W 1.0 % RN55D-F10	1	R14
23	23		1309412-00	18.2 K 1/4W 1% RN55D-F 100PPM	1	R13
24	24		1909686-00	7404 INVERTER GATE-HEX 1I	1	E9
25	25		1910406-00	75451 DRIVER,PERIPH,DUAL,	1	E1
26	26		1910741-00	7406 INVERTER GATE-HEX 1I	1	E8
27	27		1912536-01	7805 VOLT REG,FIX +5V	1	Z1
28	28		1912649-00	LS75 LATCH 4BIT,BISTABLE	1	E4
29	29		1912799-00	LS00 NAND-GATE-QUAD 2IN,P	1	E5
30	30		1912823-00	LS73 FF-JK DUAL W/CLEAR	1	E3

REVISION HISTORY			BASIC PART NO: 5413404
ENG	ECO NUMBER	REV	SECTION A OF A
RP	5413404-ML001	B	SECTION.VARIATION INDEX
J.D	5413404-PN002	C	[A] 00
J.B	5413404-PN003	D	[B]
CJ	5413404-ML004	E	[C]
CJ	5413404-ML005	F	[D]
			[E]
			[F]
			[H]
			[J]
			[K]
			[L]
			[M]
			[N]

DRN: T SHETRAWSKI	DATE: 23-JUL-79	D I G I T A L
CHK'D: T SHETRAWSKI	DATE: 23-JUL-79	TITLE PARTS LIST VT100 FULL KEYBOARD
DES.ENG: M MORGESTERN	DATE: 23-JUL-79	
RESP.ENG.: M MORGESTERN	DATE: 23-JUL-79	DOCUMENT NUMBER
MFG.ENG.: T CORCIARI	DATE: 23-JUL-79	SIZE: K; CODE: PL; NUMBER: 5413404-0-DBP; REV: F
ASSEMBLY NUMBER: D-UA-5413404-0-0	TOP DOCUMENT NUMBER:	FILE NAME: Z0783F.PLS; EDIT #: 11

AUTOMATED BY PRTLST.3L(34)

P A R T S L I S T

LINE	ITEM	DOCUMENT NUMBER	PART NUMBER	DESCRIPTION	QTY PER VARIATION 00	REFERENCE DESIGNATOR
31	31		1912824-00	LS74 FF-D DUAL-EDGE TRIGG	1	E6
32	32		1912844-00	LS151 MUX 1 OF 8 & DATA	1	E14
33	33		1913949-00	LS93 COUNTER,DECADE,4BIT	2	E7,E10
34	34		1913950-00	LS156 DECODER,2 OF 4(DUAL)	2	E11,E13
35	35		1914156-00	LM 393 VOLT.COMPARATOR DUAL	1	E2
36	36		2114137-51	UART MOS N-CHANNEL	1	E12
37	37		7013910-00	KEYBOARD ARRAY ASSY	1	
38	38		7014561-00	18 KEY NUMERIC PAD ASSY	1	
39	39		9006020-01	SCREW,PAN,PHIL 6-32X 1/4 SS	1	
40	40		9008185-00	NUT,KEP , 6-32X1/4 AF	1	
41	41		9010033-00	SCREW,PAN,PHILLIPS, 4-24 X 3/8	7	
42	42		1012312-01	.47 MFD 50V X%	1	C3

D	I	G	I	T	A	L	TITLE VT100 FULL KEYBOARD	SECTION A OF A

SIZE	CODE	DOCUMENT NUMBER	REV
K	PL	5413404-0-DBP	F

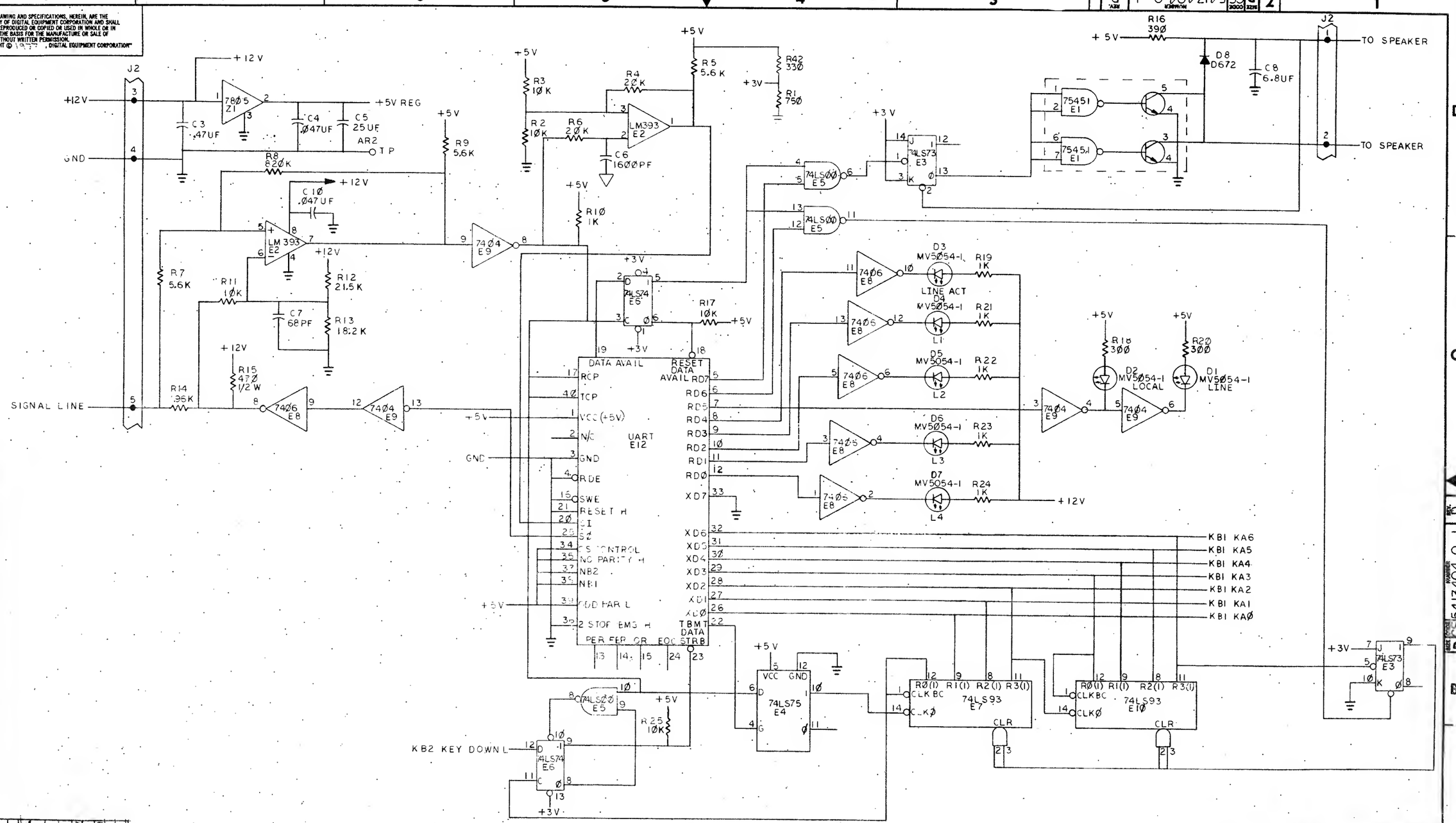

REVISIONS			
CHK	CHANGE NO.		REV.
	ML001		B
	P. NICHOLLS		
	R. PUCCI		
	5-13404-PN002		C
	J. DESUK		
	5413404-ML005		D
	JAMES	8-31-78	

DRN.		29 NOV 77
CHK'D		6/13/78
ENG.		12 MAY 78
PROJ. ENG.		12 MAY 78
PROD.		6/13/78
NEXT HIGHER ASSY.	D-DD-5413404-0-0	
SCALE	—	
SHEET	1 OF 3	

FIRST USED ON: VT100

digital

TITLE: VT100 FULL KEYBOARD (KBI)

SIZE	CODE	NUMBER	REV.
D	CS	5413404-0-1	D

DIST.

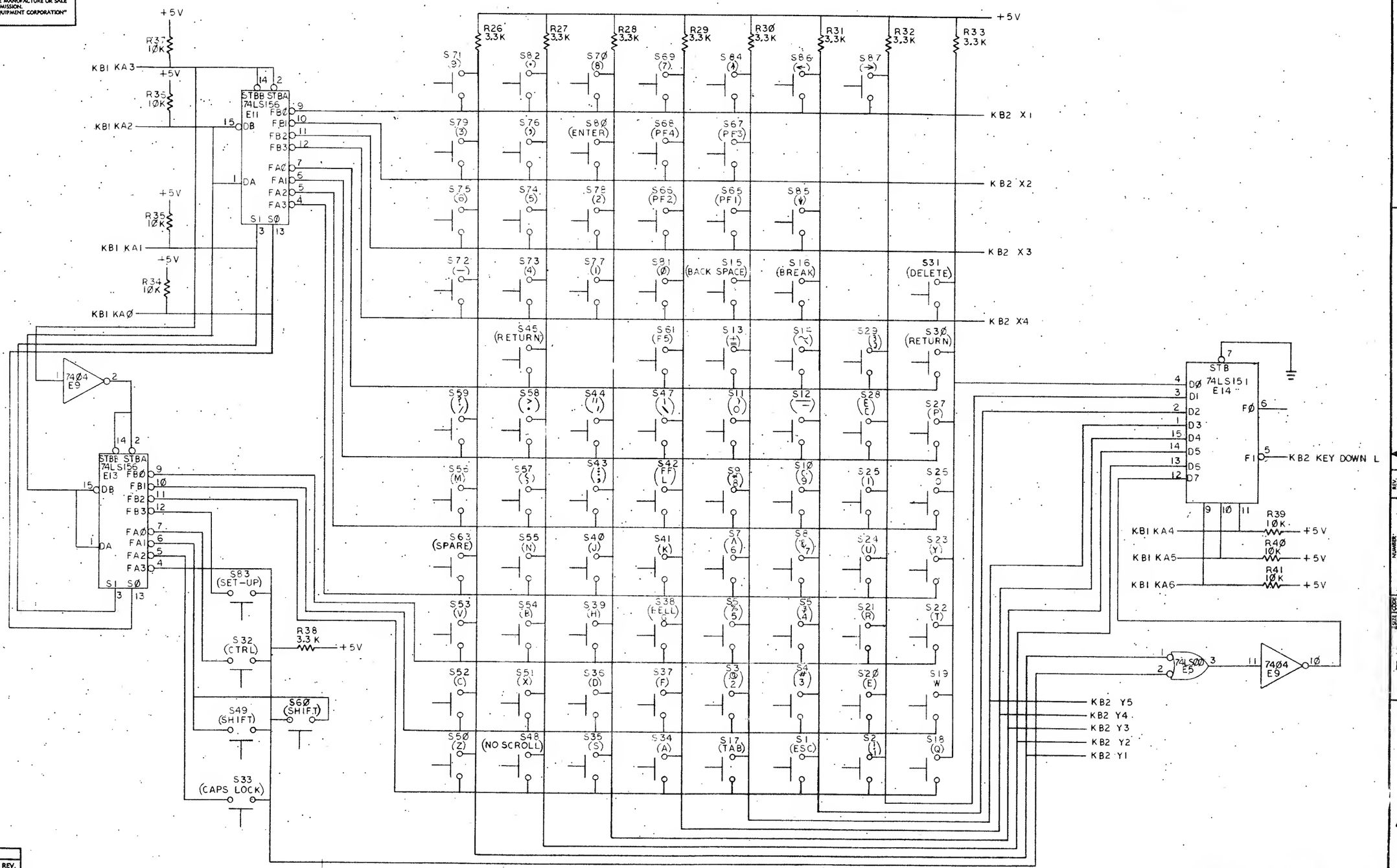

REVISIONS		
CHK	CHANGE NO.	REV.

TITLE	SIZE	CODE	NUMBER	REV.
VTIØØ FULL KEYBOARD (KB2)	D	CS	5413404-0-1	D
SCALE —	SHEET 2 OF 3	DIST.		

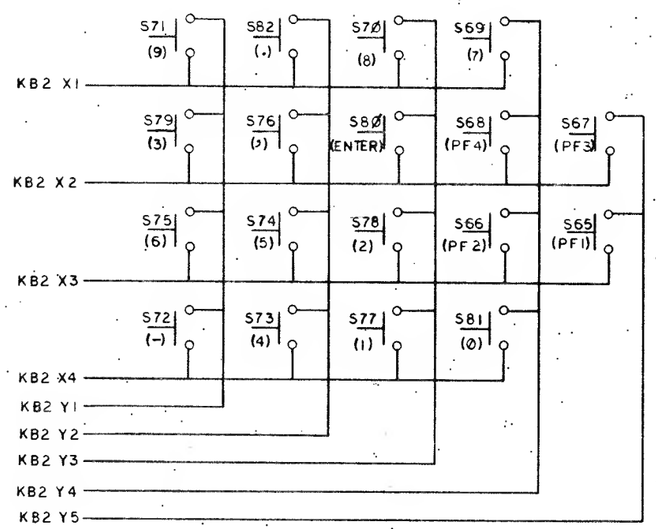

REVISIONS		
CHK	CHANGE NO.	REV.

TITLE	SIZE	CODE	NUMBER	REV.
VT100 FULL KEYBOARD (KB3)	D	CS	5413404-0-1	D
SCALE — / —	SHEET 3 OF 3	DIST.		

NOTES:

1. THE NUMERIC KEY PAD IS NOT AVAILABLE ON THE E-UA-5413404-01 VARIATION.
2. STANDARD VT100 BASIC KEYCAP SET (12/14333-72, ITEM 5) AND NUMERIC PAD (12/14333-91, ITEM 6) SHOWN. FOR KEYCAP ARRANGEMENTS REFER TO DEC DRAWING NUMBER D-AR-7015765-0-1.
3. FOR INDIVIDUAL FIELD SERVICE/CUSTOMER SPARES SHIPMENTS, USE PACKAGING INSTRUCTIONS A-SP-3700555-0-0; FOR BULK INTERPLANT SHIPMENTS, USE PACKAGING INSTRUCTIONS A-SP-3700439-00 VARIATION -00.

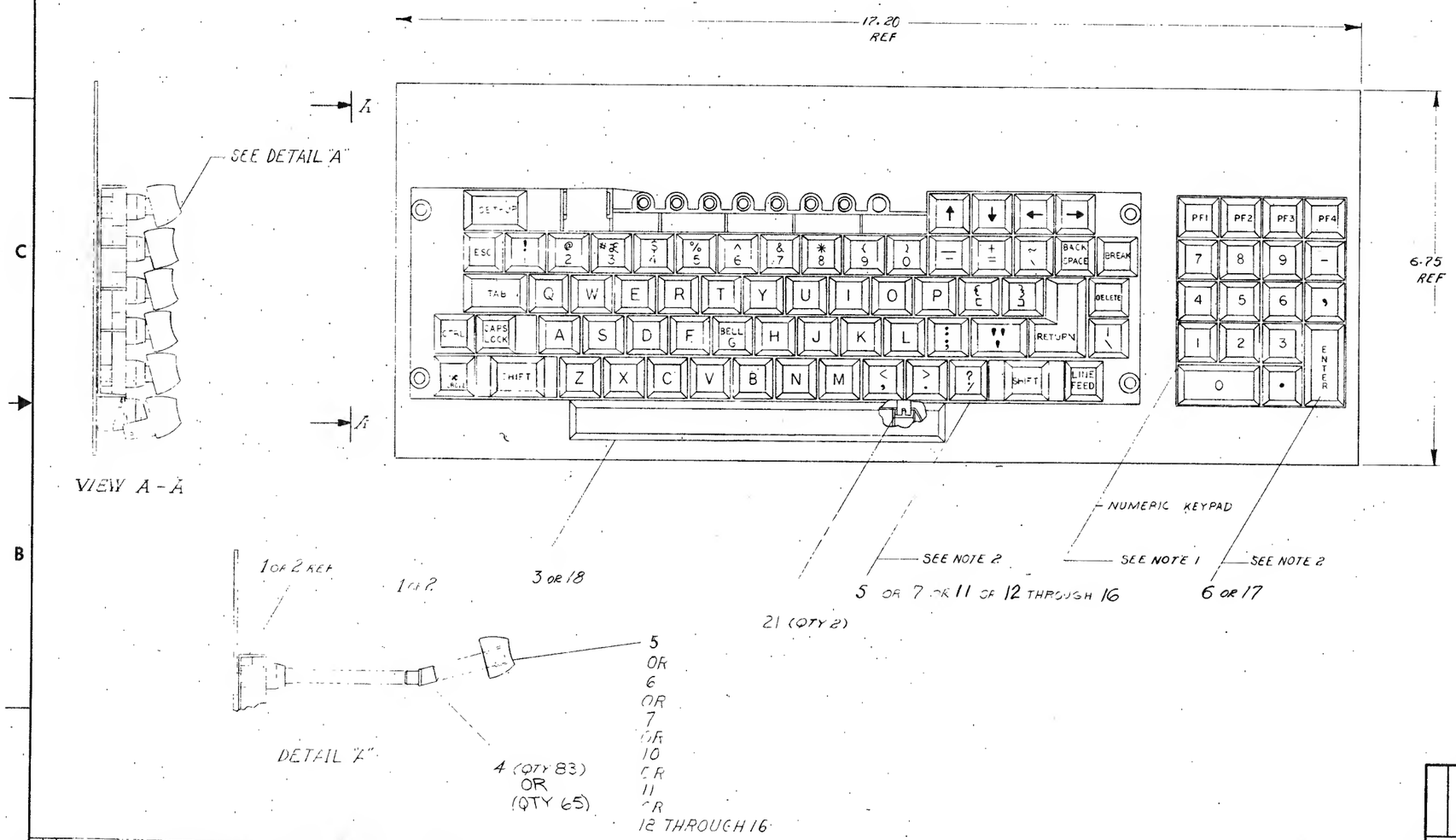

OFF SHEET PARTS LIST EXISTS
SEE K-PL-7015765-0-DBP

REVISIONS			
CHK	CHANGE NO.		REV.
W. WEEKIN	7015765-ML002		B
L. KING	VT100-PN002		C
E. C. JAMES	VT102-PN002		D
C. JAMES	7015765-ML005		F
J. DEMARINIS	VT100-ML032		E
J. DEMARINIS	7015765-ML006		H
J. DEMARINIS			

DESCRIPTION	DWG./PART NO.	ITEM NO.
UNLESS OTHERWISE SPECIFIED DIMENSIONS ARE IN INCHES		

ANGLES ±0° 30'	CLASS OF ACCURACY (CHECK ONE)	NOMINAL DIMENSION RANGE INCHES: OVER 0 TO 0.2	OVER 0.2 TO 1.2	OVER 1.2 TO 4.0	OVER 4.0 TO 12.0	OVER 12.0 TO 40.0	OVER 40.0 TO 80.0
SURFACE QUALITY IN MICROINCHES	MEDIUM	±.004	±.008	±.012	±.016	±.024	±.04
	PREFERRED	±.012	±.016	±.025	±.04	±.063	±0.1

QUANTITY & VARIATION

THIRD ANGLE PROJECTION

REMOVE BURRS AND BREAK SHARP CORNERS

DO NOT SCALE DWG

MATERIAL: SEE PARTS LIST
FINISH: NONE

DRN. 5-7-79
CHK'D 25 APR 79
ENG. C (CHARGE)
PROJ. ENG.
PROD. 5-10-79

NEXT HIGHER ASSY.: B-DD-7015765-0

SCALE: NONE
SHEET 1 OF 1

FIRST USED ON: VT100

digital

TITLE: KEY BOARD / KEY CAP ASSY

SIZE	CODE	NUMBER	REV.
D	AD	7015765-0-0	H

DIST.

DEC FORM NO DRD 100-C

AUTOMATED BY PRTLST.3P(44) P A R T S L I S T SHEET A1 OF A1

LINE	ITEM	DOCUMENT NUMBER	PART NUMBER	DESCRIPTION	QUANTITY PER VARIATION 00	01	02	03	04	05	06	07	08	09
1	1	E-AD-5413404-0-0	5413404-00	VT100 FULL KEYBOARD	1	-	1	1	1	1	1	1	1	1
2	2	E-AD-5413404-0-0	5413404-01	KEYBOARD ASSY (64 KEYS)	-	1	-	-	-	-	-	-	-	-
3	3	C-AD-7015050-0-0	7015050-00	SPACE BAR ASSY	1	1	1	1	1	1	1	1	1	-
4	4		1214332-00	SW,ARRAY CAP ADAPTER	83	65	83	83	83	83	83	83	83	83
5	5		1214333-72	KEYCAP SET,VT100 64PCS	1	1	-	-	-	-	-	-	-	-
6	6		1214333-91	KEYCAP SET,LA120/34 VT100 18PCS	1	-	-	-	-	-	-	-	-	-
7	7		1214333-C0	KEYCAP SET,VT100-NA 82PCS	-	-	1	-	-	-	-	-	-	-
8	8	C-MD-7420120-0-0	7420120-00	CLIP, EQUALIZER BAR	2	2	2	2	2	2	2	2	2	2
9	9	D-AR-7015765-0-1		KEYBOARD/KEYCAP ASSY	REF	REF	REF	REF	REF	REF	REF	REF	REF	REF
10	10		1214333-J0	KEYCAP SET,VT100-WA 82PCS	-	-	-	1	-	-	-	-	-	-
11	11		1214333-W2	SW,KEY BD CAP COMP SET U3-W1	-	-	-	-	1	-	-	-	-	-
12	12		1214333-CP	KEYCAP SET,VT100-WB 82PCS	-	-	-	-	-	1	-	-	-	-
13	13		1214333-CB	KEYCAP SET,VT100-WB 82PCS	-	-	-	-	-	-	1	-	-	-
14	14		1214333-8U	KEYCAP SET,VT100-WB 82PCS	-	-	-	-	-	-	-	1	-	-
15	15		1214333-EY	KEYCAP SET,VT100-WB 82PCS	-	-	-	-	-	-	-	-	1	-
16	16		1214333-2Y	KEYCAP SET,VT100 64PCS	-	-	-	-	-	-	-	-	-	1
17	17		1214333-3W	KEYCAP SET,LA120/34 VT100 18PCS	-	-	-	-	-	-	-	-	-	1
18	18	D-AD-7015050-0-0	7015050-01	SPACE BAR ASSY. GRAY	-	-	-	-	-	-	-	-	-	1
19	19	A-SP-3700555-0-0	3700555-00	PKG KEYBOARD 7015765	1	1	1	1	1	1	1	1	1	1
20	20	A-SP-3700439-0-0	3700439-00	INSTR PKG. BULK CARTON 99-06476-	1	1	1	1	1	1	1	1	1	1

REVISION HISTORY			BASIC PART NO: 7015765			
ENG	ECO NUMBER	REV	SECTION A OF A	DRN: ANGEL COLON	DATE: 3 APR 78	D I G I T A L
---	INITIAL	F	SECTION. VARIATION INDEX	CHK'D: D. HEALY	DATE: 7 APR 78	TITLE PARTS LIST
JD	7015765-ML005	F	[A] 00,01,02,03,04,05, 06,07,08,09			KEYBOARD/KEYCAP ASSEMBLY
			[B]	DES.ENG.: E. WEDEKING	DATE: 10 MAY 78	
			[C]			DOCUMENT NUMBER
			[D]	RESP.ENG.: G. DOUMANI	DATE: 17 MAY 7	SIZE / CODE / NUMBER / REV
			[E]	MFG.ENG.: K. HOFFMAN	DATE: 10 MAY 78	K / PL / 7015765-0-DBP / F
			[F]	ASSEMBLY NUMBER: D-AD-7015765-0-0	TOP DOCUMENT NUMBER: #B-DD-7015765-0	FILE NAME: Z1933F.PLS / EDIT # 4

NOTES:

1. THE FOLLOWING TABLE (SHEET 2) LISTS VARIATION NUMBERS FOR 12 4333 (KEYCAPS) INDICATING THE SPECIFIC KEYBOARD POSITION OF EACH AS USED ON VARIOUS MODELS.

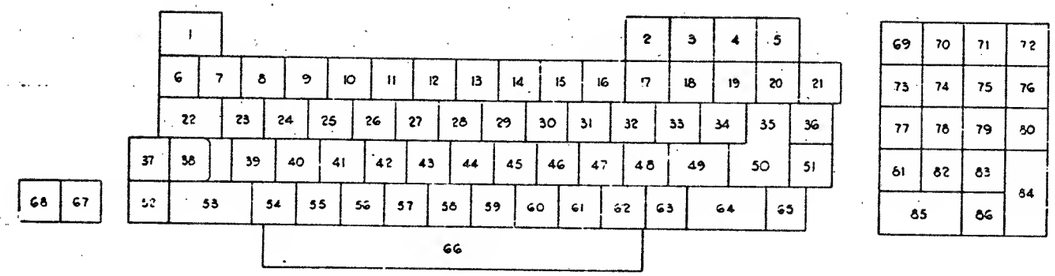

KEYBOARD CAP POSITIONS
(SEE NOTE 1 & TABLE, SHEET 2)

REV	CHANGE NO.	CHK	REVISIONS
A	1201		
B			
C			
D	1160 ML032		J DEMARINIS
E	1015765-ML003		J DEMARINIS
F	1015765 ML004		F HARNDEN

DESCRIPTION	DWG. PART NO.	ITEM NO.
UNLESS OTHERWISE SPECIFIED DIMENSIONS ARE IN INCHES		

CLASS OF ACCURACY (CHECK ONE)	OVER 0 TO 0.2	OVER 0.2 TO 1.2	OVER 1.2 TO 4.0	OVER 4.0 TO 12.0	OVER 12.0 TO 40.0	OVER 40.0 TO 80.0
MEDIUM	±.004	±.008	±.012	±.016	±.024	±.04
PREFERRED	±.012	±.016	±.025	±.04	±.063	±0.1

ANGLES ±0° 30'
SURFACE QUALITY IN MICROINCHES
QUANTITY & VARIATION
THIRD ANGLE PROJECTION
REMOVE BURRS AND BREAK SHARP CORNERS
DO NOT SCALE DWG
MATERIAL
FINISH
DRN.
CHK'D
ENG.
PROJ. ENG.
PROD.
NEXT HIGHER ASSY.
SCALE
SHEET OF

FIRST USED ON
digital
TITLE KEYBD CAP-POSITION ARRANGEMENT
SIZE D | CODE | NUMBER AR7015765-0-1 | REV. F
DIST.

KEYCAP VARIATION (1214333-XX) POSITIONS (SEE NOTE 1, SHEET 1)

KEYBOARD CAP POSITIONS (SEE SHEET 1)	1	2	3	4	5	6	7	8	9	10		12	13	14	15	16	17	18	19	20	21	22	23	24	25	26	27	28
VT100 (1214333-72 & BASIC (1214333-91	46	67	68	69	70	47	25	26	27	28	29	30	31	32	33	34	35	36	37	44	45	40	15	21	05	16	18	23
LA120 (1214333-64 & BASIC (1214333-91	46	59	[illegible]	60	61	47	25	26	27	28	29	30	5	32	33	34	35	36	37	44	45	40	15	21	05	16	18	23
LA34 (1214333-96 & BASIC (1214333-25)	46	92	[illegible]	62	61	47	25	26	27	28	29	30	15	32	33	34	35	36	37	44	45	40	15	21	05	16	18	23
VT100 -NA & -NE DECFORM (1214333-C5)	46	96	97	98	99	47	25	26	27	28	29	30	[illegible]	32	33	34	35	36	37	44	45	40	15	21	05	16	18	23
VT100-WA & WB WORD PROC (1214333-ZO)	46	E8	E9	F0	F1	47	25	26	27	28	29	30	31	32	33	34	E4	E5	E6	E7	45	40	D8	21	05	D9	E0	23
VT100-FA & AB COMP. SET 1214333-KZ	46	67	68	69	70	47	25	26	27	28	29	30	31	32	33	34	35	36	37	44	45	40	15	[illegible]	05	16	18	23
VT100-WC & WD 1214333-CP FF CANADIAN	46	E8	E9	F0	F1	47	25	CC	CD	28	29	CE	31	32	33	34	E4	E5	CF	E7	45	40	D8	21	05	D9	[illegible]	23
VT100-WE & WF 1214333-CB FRENCH	AP	E8	E9	[illegible]	9T	47	AR	AS	AT	AU	AW	AY	AZ	BA	BB	BC	9W	9P	9R	9S	AC	40	BS	M0	05	BT	BU	23
VT100-WG & WH 1214333-BO DUTCH	46	E8	E9	F0	F1	47	72	8A	[illegible]	28	29	8B	31	J8	J9	8D	9F	9H	8E	E7	45	40	D8	21	05	D9	E0	23
VT100-WJ & WK 1214333-EY GERMAN	BH	E8	E9	F0	CZ	47	25	CC	M1	28	29	K1	L7	J8	J9	J5	DA	DB	8E	DD	45	40	EU	21	05	DF	D4	K5
VT100 SPECIAL DARK GRAY 1214333-2Y	1P	2R	2S	2T	2U	1R	0N	0P	0R	0S	0T	0U	0W	0Y	0Z	1A	1B	1C	1D	1M	1N	1H	0B	0J	Z1	CC	0E	0L
VT100 SPECIAL NUMERK DARK GRAY 1214333-3W	-	-	-	-	-	-	-	-	-	-	-	-	-	-	-	-	-	-	-	-	-	-	-	-	-	-	-	-
VT100-XA TO XJ (1214333-PY)	46	67	68	69	70	47	25	26	27	28	29	30	31	32	33	34	35	36	37	44	45	40	15	21	05	16	18	23
VT100-XS TO XY (1214333-MF)	46	E8	E9	F0	F1	47	25	26	27	28	27	30	31	32	33	34	E4	E5	E6	E7	45	40	D8	21	05	D9	E0	23

KEYBOARD CAP POSITIONS (SEE SHEET 1)	29	30	31	32	33	34	35	36	37	38	39	40	41	42	43	44	45	46	47	48	49	51	52	53	54	55	56
VT100 (1214333-72 & BASIC (1214333-91	19	09	13	14	38	39	43	48	50	42	01	17	04	06	07	08	10	65	66	53	52	51	71	41	24	22	03
LA120 (1214333-64 & BASIC (1214333-91	19	09	13	14	38	39	43	48	50	42	01	17	04	06	07	08	10	57	58	53	52	51	63	41	24	22	03
LA34 (1214333-96 & BASIC (1214333-25)	19	09	13	14	38	39	43	48	50	42	01	17	04	06	07	08	10	65	66	53	52	51	63	41	24	22	03
VT100 -NA & -NE DECFORM (1214333-C5)	19	09	13	14	38	39	43	A6	50	42	01	17	04	06	07	08	10	65	66	53	52	51	71	41	24	22	C3
VT100-WA & WB WORD PROC (1214333-ZO)	19	09	13	E1	E2	39	D6	E3	50	42	D0	17	D1	D2	D3	08	10	65	D4	53	D5	D7	71	41	24	22	C1
VT100-FA & AB COMP. SET 1214333-KZ	19	09	13	14	38	39	43	48	50	42	01	17	04	06	07	08	10	65	66	53	52	51	71	41	24	22	03
VT100-WC & WD 1214333-CP FF CANADIAN	19	09	13	E1	CH	CL	D6	E3	50	42	D0	17	D1	D2	D3	08	10	65	D4	53	CM	D7	71	41	24	22	C1
VT100-WE & WF 1214333-CB FRENCH	19	09	13	BW	BY	CA	BF	EZ	50	BN	9H	17	9K	9L	9M	08	10	65	BK	9B	BL	BM	BR	WO	M2	22	C1
VT100-WG & WH 1214333-BO DUTCH	19	09	13	E1	8K	5C	D6	E3	50	42	D0	17	D1	D2	D3	08	10	65	D4	8L	8M	D7	71	41	24	22	C1
VT100-WJ & WK 1214333-EY GERMAN	19	09	[illegible]	DJ	9V	L7	DV	EW	50	BN	EB	17	DL	DM	DN	08	10	65	D4	K6	DF	DP	71	WO	L5	22	C1
VT100 SPECIAL DARK GRAY 1214333-2Y	0F	Z5	Z9	0A	1E	1F	1L	1S	1U	1K	Y7	0D	Z0	Z2	Z3	Z4	Z6	2N	2P	1Z	1Y	1W	2W	1J	0M	0K	Y9
VT100 SPECIAL NUMERK DARK GRAY 1214333-3W	-	-	-	-	-	-	-	-	-	-	-	-	-	-	-	-	-	-	-	-	-	-	-	-	-	-	-
VT100-XA TO XJ (1214333-PY)	19	09	13	14	38	39	43	48	50	42	01	17	04	06	07	08	10	65	66	53	52	51	71	41	24	22	03
VT100-XS TO XY (1214333-MF)	19	09	13	E1	E2	39	D6	E3	50	42	D0	17	D1	D2	D3	08	10	65	D4	53	D5	D7	71	41	24	22	C1

KEYBOARD CAP POSITIONS (SEE SHEET 1)	57	58	59	60	61	62	63	64	65	67	68	69	70	71	72	73	74	75	76	77	78	79	80	81	82	83	84	85	86
VT100 (1214333-72 & BASIC (1214333-91	20	02	12	11	54	55	56	41	49	-	-	87	88	89	90	80	81	82	83	77	78	79	84	74	75	76	86	73	85
LA120 (1214333-64 & BASIC (1214333-91	20	02	12	11	54	55	56	41	49	-	-	87	88	89	90	80	81	82	83	77	78	79	84	74	75	76	86	73	85
LA34 (1214333-96 & BASIC (1214333-25)	20	02	12	11	54	55	56	41	49	94	93	87	88	89	90	80	81	82	83	77	78	79	84	74	75	76	86	73	85
VT100 -NA & -NE DECFORM (1214333-C5)	20	02	12	11	54	55	56	41	A1	-	-	A2	A3	A4	A5	87	88	89	A7	84	85	86	A8	[illegible]	82	83	80	A6	A9
VT100-WA & WB WORD PROC (1214333-ZO)	C2	C3	C4	C5	C6	C8	C7	41	C9			F2	F3	F4	F5	F6	F7	F8	F9	H0	H1	H2	H3	H4	H5	H6	H9	H7	H8
VT100-FA & AB COMP. SET 1214333-KZ	20	02	12	11	54	55	56	41	49	-	-	U4	U5	U6	W1	80	81	82	U7	77	78	79	U8	74	75	76	W8	73	[illegible]
VT100-WC & WD 1214333-CP FF CANADIAN	C2	C3	C4	C5	C6	C8	CN	41	CK			F2	F3	F4	F5	F6	F7	F8	F9	H0	H1	H2	H3	H4	H5	H6	H9	WJ	H8
VT100-WE & WF 1214333-CB FRENCH	8N	8Z	3A	BF	3C	3D	3E	ND	9F			BE	BD	AM	AN	AF	AH	AK	AL	AB	H1	AD	AE	[illegible]	32	[illegible]	3W	3U	H8
VT100-WG & WH 1214333-BO DUTCH	C2	C3	C4	C5	8N	8P	8R	41	8S			F2	F3	F4	F5	F6	F7	F8	F9	H0	H1	H2	H3	H4	H5	H6	H9	H7	H8
VT100-WJ & WK 1214333-EY GERMAN	DE	DS	DT	DU	DW	DY	DZ	WO	EC			F2	EA	ED	EE	EF	F7	AK	EH	EJ	EK	EL	ET	[illegible]	EM	EP	EP	ES	H8
VT100 SPECIAL DARK GRAY 1214333-2Y	0H	Y8	Z8	Z7	2A	2B	2C	1J	1T	-	-	-	-	-	-	-	-	-	-	-	-	-	-	-	-	-	-	-	-
VT100 SPECIAL NUMERK DARK GRAY 1214333-3W	-	-	-	-	-	-	-	-	-	-	-	3R	3S	3T	3U	3H	3J	3K	3L	3D	3E	3F	3M	3A	3B	3C	3P	2Z	3N
VT100-XA TO XJ (1214333-PY)	20	02	12	11	54	55	56	41	49	-	-	87	88	89	90	60	81	82	83	77	78	79	84	74	75	76	86	73	85
VT100-XS TO XY (1214333-MF)	C2	C3	C4	C5	C6	C8	C7	41	C9	-	-	F2	F3	F4	F5	F6	F7	F8	F9	H0	H1	H2	H3	H4	H5	H6	H9	H7	H8

SIZE	CODE	NUMBER	REV.
D	AN	7015735-0-1	F

REVISIONS

CHK	CHANGE NO.	REV.

TITLE KEYBD CAP-POSITION ARRANGEMENT

SIZE	CODE	NUMBER	REV.
D	AR	7015735 - 0 -	E

SCALE NONE
SHEET 2 OF 2
DIST.

WIRE TABLE

	ITEM NO	DESCRIPTION AWG	COLOR	FROM CONN	FROM WITH	TO CONN	TO WITH	REMARKS	PRECUT WIRE LG FOR VAR-00	PRECUT WIRE LG FOR VAR-01	PRECUT WIRE LG FOR VAR-02
	5	18	RED	P1-22	4	P2-18	4		12.5±.50	2.5±.50	12.5±.50
			RED	P1-21		P2-17					
			RED	P1-20		P2-16					
			RED	P1-19		P2-15					
			RED	P1-18		P2-14					
			BLK	P1-17		P2-13					
			BLK	P1-16		P2-12					
			BLK	P1-15		P2-11					
			BLK	P1-14		P2-10					
	5		BLK	P1-13	4	P2-9			12.5±.50	2.5±.50	13.5±.50
FOR VAR -01 & -02	10		GRN	P5	9	P2-8		GRD FOR VAR -01 & -02		2.75±.25	2.75±.25
	5		YEL	P1-11	4	P2-7			12.5±.50	12.5±.50	13.5±.50
			RED	P1-10		P2-6					
			BLUE	P1-9		P2-5					
			BLK	P1-8		P2-4					
	5		ORG	P1-7		P2-3			12.5±.50	12.5±.50	13.5±.50
	6		WHT	P1-4		P3-9			19.5±.50	19.5±.50	20.5±.50
			GRY	P1-3		P3-8					
			GRN	P1-2		P3-10					
	6		YEL	P1-1	4	P3-6			19.5±.50	19.5±.50	20.5±.50
	10		GRN	P4	9	P3-5		GRD.	2.75±.25	2.75±.25	2.75±.25
	6		ORG	P2-1	4	P3-7			19.5±.50	19.5±.50	20.5±.50
	6	18	BLK	P2-2	4	P3-1	4		19.5±.50	19.5±.50	20.5±.50
FOR VAR -00	5	18	BLK	P1-12	4	P2-6		FOR VAR-00	12.5±.50		

OVER ALL CABLE LG.		
VARIATION	DIM A	DIM B
7014978-00	18.50±.50	11.50±.50
7014978-01	18.50±.50	11.50±.50
7014978-02	20.50±.50	13.50±.50

NOTES:

1. IDENTIFICATION: DECAL USING 1/8" CHARACTER HEIGHT AS INDICATED BELOW TO HIGHEST LEVEL OF SUBASSEMBLY SPECIFIED ON PURCHASE ORDER AND LOCATE APPROX. AS SHOWN ON DRAWING.
   A.) PART NUMBER
   B.) REVISION
   C.) VENDOR IDENTIFICATION
   D.) DATE, CODE
2. ON VARIATION (-01 & -02), CUT BACK BLK WIRE FROM P2-8 TO P1-12 2.5±.25 IN. FROM BOTH ENDS.
3. CUT BACK ORN & BLK WIRES OF (ITEM #6) TO 12.5±.25 IN.

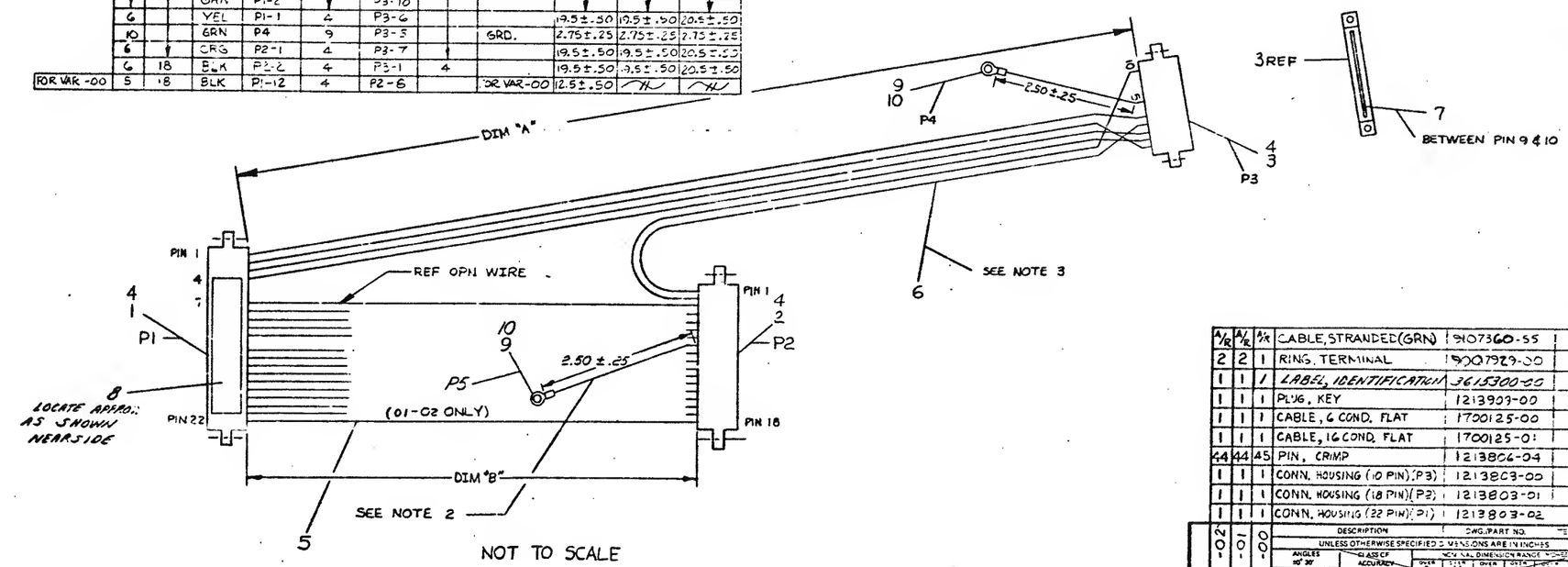

NOT TO SCALE

A/R	A/R	A/R			
			CABLE, STRANDED (GRN)	9107360-55	10
2	2	1	RING, TERMINAL	9007929-00	9
1	1	1	LABEL, IDENTIFICATION	3615300-00	8
1	1	1	PLUG, KEY	1213903-00	7
1	1	1	CABLE, 6 COND. FLAT	1700125-00	6
1	1	1	CABLE, 16 COND. FLAT	1700125-01	5
44	44	45	PIN, CRIMP	1213806-04	4
1	1	1	CONN. HOUSING (10 PIN) (P3)	1213803-00	3
1	1	1	CONN. HOUSING (18 PIN) (P2)	1213803-01	2
1	1	1	CONN. HOUSING (22 PIN) (P1)	1213803-02	1
-02	-01	-00	DESCRIPTION	DWG./PART NO.	ITEM NO.

QUANTITY & VARIATION

UNLESS OTHERWISE SPECIFIED DIMENSIONS ARE IN INCHES

ANGLES ±0° 30'	CLASS OF ACCURACY (CHECK ONE)	NOMINAL DIMENSION RANGE					
		OVER 0 TO 0.3	OVER 0.3 TO 6	OVER 6 TO 30	OVER 30 TO 120	OVER 120 TO 480	OVER 480 TO 960
SURFACE QUALITY IN MICROINCHES	MEDIUM	±.005	±.010	±.012	±.016	±.024	±.04
	PREFERRED	±.002	±.005	±.005	±.01	±.02	±.03

THIRD ANGLE PROJECTION

REMOVE BURRS AND BREAK SHARP CORNERS

DO NOT SCALE DWG

MATERIAL: SEE PARTS LIST

FINISH

DRN. [illegible] CHK'D [illegible] ENG. [illegible] PROJ. ENG. [illegible] PROD. [illegible]

NEXT HIGHER ASSY.: E-UA-[illegible]-B

SCALE NONE

SHEET 1 OF 1

FIRST USED ON [illegible]

digital

TITLE: POWER CABLE ASSY

SIZE D | CODE UA | NUMBER 7014978-0- | REV. C

DIST.

REV.	CHANGE NO.	DWN	
A	[illegible]	J. BITTO	[illegible]
B	70149-8-PNOOX	J. BITTO	[illegible]
C	[illegible]	C. JAMES	[illegible]

REVISIONS

7014978-0

ML

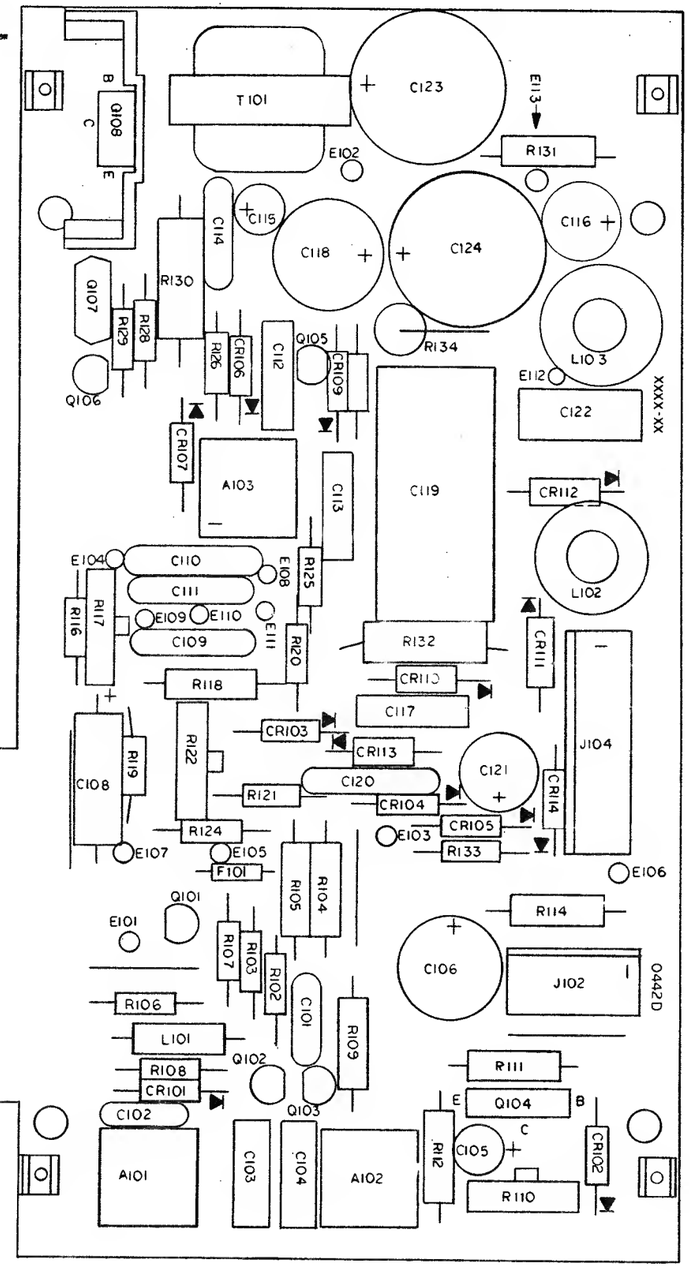

COPIED BY WRITTEN PERMISSION
OF BALL BROTHERS INC.

REF SYM	DESCRIPTION	PART NUMBER
RESISTOR, FIXED, CARBON, 5%, 1 4W UNLESS NOTED		
R101	47	70-16-0470
R102	30	70-16-0300
R103	47	70-16-0470
R104	220, 1/2W	1-011-2254
R105	820, 1/2W	1-011-2268
R106	470	70-16-0471
R107	360	70-16-0361
R108	100K	70-16-0104
R109	180, 1/2W	1-011-2252
R110	VAR; 250 20%, CO VERT HGT	70-89-0251
R111	12, 1/2W	1-011-2224
R112	15; 1/2W	1-011-2226
R113	NOT USED	
R114	1.5K; 1/2W	1-011-2274
R115	NOT USED	
R116	62K	70-16-0623
R117	100K, 20P	1-011-5435
R118	30K; 1/2W	1-011-2305
R119	9.1K	70-16-0912
R120	8.2M	70-16-0825
R121	100K	70-16-0104
R122	VAR; 2.5M 20%, CO FOC ADJ	1-011-5566
R123	NOT USED	
R124	510	70-16-0511
R125	1K	70-16-0102
R126	20K	70-16-0203
R127	3.3K	70-16-0332
R128	15K	70-16-0153
R129	2.4K	70-16-0242
R130	56 10; 3W, WW	1-011-2521
R131	1.2; 1/2W, CO	1-011-2520
R132	1.2 10%; 2W, WW	1-011-1395
R133	6.8K	70-16-0682
R134	1.8, 2W	1-011-2417
R135	NOT USED	
TRANSFORMER		
T2	HIGH VOLTAGE	6-003-0586
T101	HORIZ DRIVER	1-017-5402
MISCELLANEOUS		
	*CRT SOCKET	1-022-0427
	WIRE STRD GRN	1-038-0345
	HEATSINK	1-015-5059
	WIRE STRD BLU	1-038-0346
	WIRE STRD RED	1-038-0342
	CONTACT, FEMALE ÷ 2	1-034-0362
	MCHSCR 6-32X1/4	3-011-0310
	NUT 6-32	3-012-0161
	LK WSHR #6	3-013-0180
	PWB	1-029-0442
	CONTACT, MALE	1-034-0295
	CONN SHELL, 1 CONT FEMALE	1-034-0323
WIRE TERMINATION DATA		
E103	CRT SOCKET YEL LEAD	
E105	CRT SOCKET BRN LEAD	
E107	CRT SOCKET BLK LEAD	
E108	CRT SOCKET RED LEAD	
E109	CRT SOCKET WHT LEAD	
E110	GRN WIRE 6.5 INCHES	
E111	CRT SOCKET ORN LEAD	
E112	BLUE WIRE 10 INCHES	
E113	RED WIRE, 10 INCHES	

NOTES:
1. REFERENCE SCHEMATIC 1-024-0603
2. ALL REFERENCE SYMBOL NUMBERS 1 TO 99 ARE USED FOR ALL OFF BOARD COMPONENTS AND NUMBERS 100 TO 999 ARE USED FOR THE PWA COMPONENTS.
3. ALL PWA COMPONENTS PRECEDED WITH AN ASTERISK ARE NOT PART OF THE BASIC BOARD 6-200-0001.

PARTS LIST, TVX 120/DEC

REF SYM	DESCRIPTION	PART NUMBER
A101	RES TRIM, 60K, VERT HOLD	1-011-8006
A102	RES TRIM, 20K, VERT LIN	1-011-8005
A103	RES TRIM, 2.5K, VIDEO CENTER	1-011-8001
CAPACITOR, FIXED, UF UNLESS NOTED		
C101	270PF 5%, 500V, DM	1-012-0396
C102	.005 20%, 100V, CO	10-12-7508
C103	.22 10%, 100V, MY	1-012-2277
C104	.22 10%, 100V, MY	1-012-2277
C105	.68, 50V, E	1-012-2284
C106	470, 6.3V, E	1-012-2158
C107	NOT USED	
C108	22, 25V, E	1-012-1380
C109	.01 20%, 1000V, CO	1-012-2214
C110	.02 20%, 1000V, CO	1-012-2217
C111	.01 20%, 1000V, CO	1-012-2214
C112	.0022 10%, 630V, MY	1-012-2254
C113	.0047 20%, 630V, MY	1-012-2279
C114	.02 20%, 100V, CO	10-12-7209
C115	1, 50V, E	1-012-2189
C116	50, 50V, E	1-012-2157
C117	.047 20%, 250V, MY	1-012-2240
C118	220, 25V, E	1-012-2159
C119	10 10%, 100V, MY	1-012-2255
C120	.02 20%, 500V, CO	1-012-0780
C121	50, 50V, E	1-012-2157
C122	.022 10%, 250V, PP	1-012-2297
C123	10, 25V, ER	1-012-2273
C124	10, 25V, ER	1-012-2273
DIODE		
CR1	D0424	1-021-0424
CR101	D0410	1-021-0410
CR102	D0410	1-021-0410
CR103	D0410	1-021-0410
CR104	D0410	1-021-0410
CR105	D0410	1-021-0410
CR106	D0410	1-021-0410
CR107	D0410	1-021-0410
CR108	NOT USED	
CR109	D0410	1-021-0410
CR110	D0403	1-021-0403
CR111	D0458	1-021-0458
CR112	D0458	1-021-0458
CR113	D0403	1-021-0403
CR114	D0410	1-021-0410
FUSE		
F101	2A-125V PICO	1-028-0247
CONNECTORS		
J102	CONNECTOR, 4 PIN MALE	1-039-0146
J102	NOT USED	
J104	CONNECTOR, 7 PIN MALE	1-039-0145
COIL		
L1	VERTICAL CHOKE	6-003-0572
L2	DEFLECTION, TVX 120/12V	1-023-0246
L101	560UH	1-016-0302
L102	LINEARITY	1-016-0328
L103	WIDTH	1-016-0303
TRANSISTOR		
Q101	2N5830	1-015-1172
Q102	2N6027	1-015-1157
Q103	MPS-A65	1-015-1186
Q104	MJE3055	1-015-1156
Q105	2N4124	1-015-1139
Q106	2N4124	1-015-1139
Q107	MPS-U05	1-015-1158
Q108	BU407	1-015-1210

NOTES:
1.) FLYBACK TRANSFORMER REPLACEMENT 3014590-01
2.) PRINTED CIRCUIT BOARD REPLACEMENT 3014590-02

CHK	CHANGE NO	REV

ETCH REV.
P.C. DESIGN DATA BASE REV.

SIGNATURES	DATE
DRN.	8-18-78
CHK'D.	8-6-78
ENG. Richard Pucci	12-6-78
PROJ.ENG. Richard Pucci	12-6-78
PROD.	
SCALE	
SHT. 1 OF 2	
NEXT HIGHER ASSY.	

digital

TITLE SCHEMATIC TVX120/DEC 12 VOLT

SIZE	CODE	NUMBER	REV
D	CS	3014590-0-1	A

MS#180297

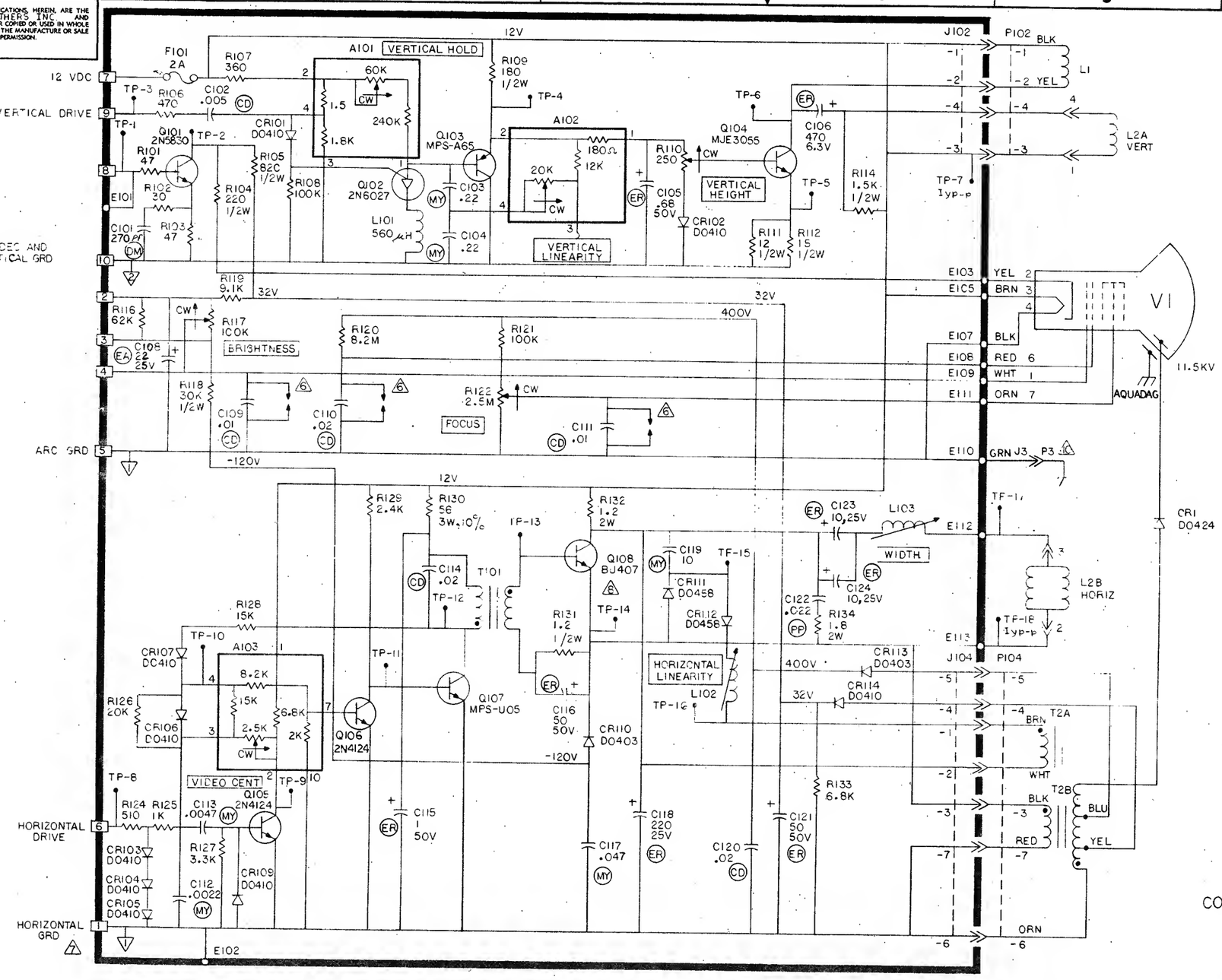

GENERAL NOTES: UNLESS OTHERWISE SPECIFIED

1. ALL RESISTORS 1/4W, 5%, VALUE IN OHMS.
2. ALL CAPACITOR VALUES IN MICROFARADS. FOR CAPACITOR TYPES, SEE NOTE NO. 9.
3. ▭ DENOTES J101 PC CARD EDGE CONNECTOR.
4. —>>— DENOTES CONNECTION TO OFF BOARD COMPONENTS.
5. REFERENCE DESIGNATIONS NOT USED: J103, C107, CR108, R101, R113, R115, R123
   LAST REFERENCE DESIGNATION USED: R134, C124
6. PROTECTIVE ARC GAPS ARE AN INTEGRAL PART OF PRINTED WIRE BOARD.
7. THE PWB CIRCUIT GROUNDS ARE BROUGHT OUT SEPARATELY TO PINS 1, 5 AND 10 OF J101. PWB CIRCUIT GROUNDS FOR PINS 1 AND 5 OF J101 ARE CONNECTED TOGETHER BY A JUMPER WIRE ON THE BOARD AND ARE CONNECTED TO CHASSIS GROUND VIA A WIRE FROM E110.
8. DENOTES HEATSINK
9. (DM) = DIPPED MICA
   (CD) = CERAMIC DISC
   (MY) = MYLAR
   (EA) = ELECTROLYTIC AXIAL
   (ER) = ELECTROLYTIC RADIAL
   (PP) = POLYPROPYLENE
10. GROUNDED TO AQUADAG BY SPRING

DRN. Jim Dangelo	7/20/78	FIRST USED ON VT100
CHK'D	12-6-78	TITLE SCHEMATIC TVX120/DEC 12 VOLT
ENG.	12-6-78	
PROJ. ENG.	12-6-78	
PROD.		
NEXT HIGHER ASSY. E-UA-VT100-0-0		SIZE D CODE CS NUMBER 3014590-0-1 REV. A
SCALE NONE		
SHEET 2 OF 2		DIST.

REVISIONS: REV. | CHANGE NO. | CHK.

BLM. P-1144 REC FORM NO. DED 102-0

NOTES:

1. INSERT CONN. (ITEM 3) INTO CONN. OF (ITEM 2) FOR TESTING OPTION.
2. PACKAGING: WHEN SHIPPED, MATERIAL SHALL BE ADEQUATELY PROTECTED FROM HANDLING AND SHIPPING DAMAGE USING DIGITAL PACKAGING INSTRUCTION A-SP-3700538-00
3. LOCATE APPROX. AS SHOWN ON DWG.
4. TORQUE (ITEM 6) TO 6.0 IN-LBS ± .5 IN-LBS.
5. TORQUE (ITEM 7) TO 8.0 IN-LBS ± .5 IN-LBS.

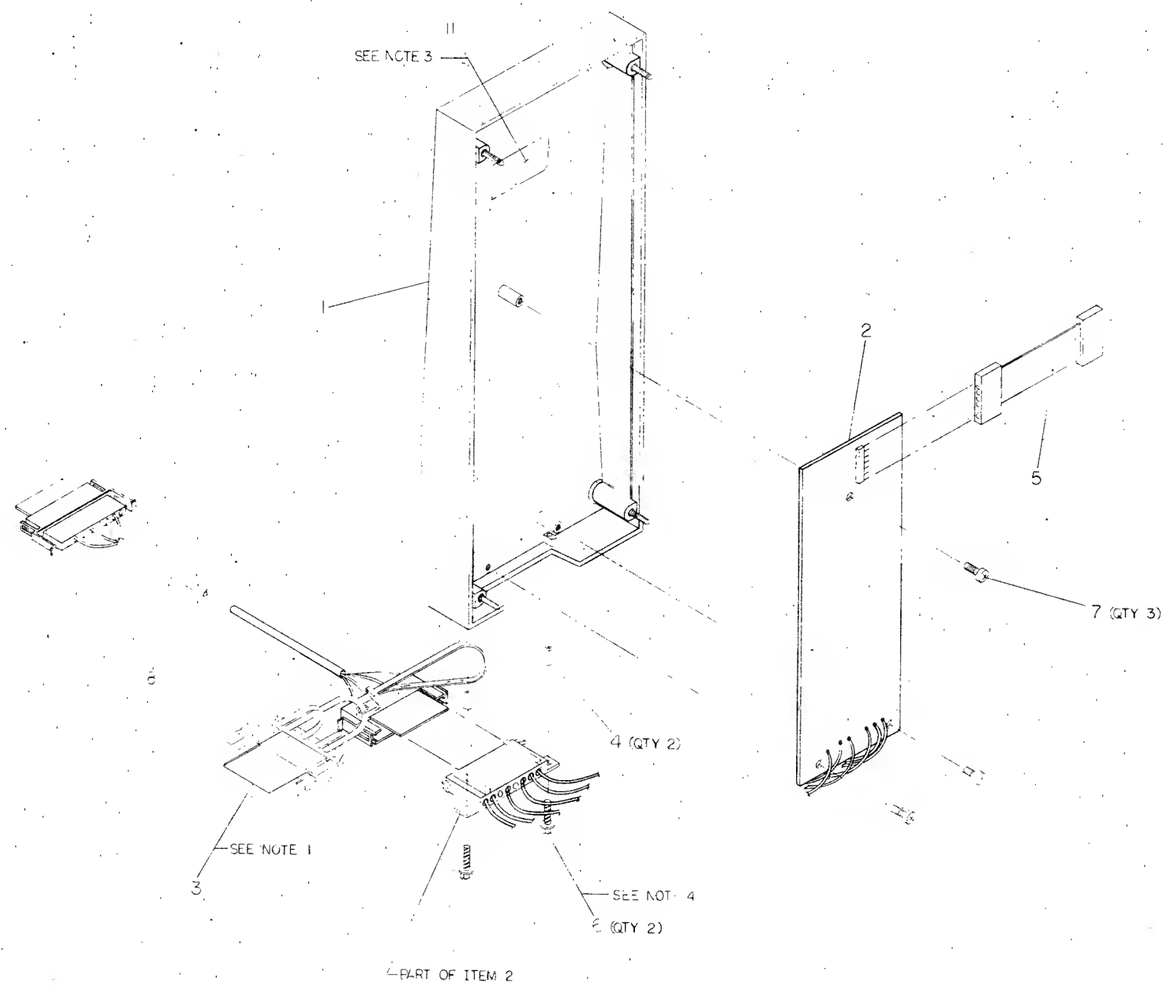

CAUTION: OFF SHEET PARTS LIST EXISTS. REFER TO K-PL-VTIXX-AA-DBP

REVISIONS			
DWG.	CHANGE NO.	REV.	
	VTIXX-AA-MLØ01	A	
	G. DOUMANI		
	VTIXX-AA-MLØ03	B	
	JOE DEMARINIS		

DESCRIPTION	DWG./PART NO.	ITEM NO.
UNLESS OTHERWISE SPECIFIED DIMENSIONS ARE IN INCHES		

CLASS OF ACCURACY (CHECK ONE)	OVER 0 TO 0.3	OVER 0.3 TO 1.3	OVER 1.3 TO 4.8	OVER 4.8 TO 12.0	OVER 12.0 TO 40.0	OVER 40.0 TO 80.0
MEDIUM	±.004	±.008	±.012	±.016	±.024	±.04
PREFERRED	±.012	±.016	±.025	±.04	±.063	±0.1

ANGLES 45° 30'

SURFACE QUALITY IN MICROINCHES

QUANTITY & VARIATION

THIRD ANGLE PROJECTION

REMOVE BURRS AND BREAK SHARP CORNERS

DO NOT SCALE DWG.

MATERIAL SEE PARTS LIST

FINISH

DRN. JW 8-8-78
CHK'D
ENG.
PROJ. ENG.
PROD.
NEXT HIGHER ASSY. B-DD-VTIXX-AA
SCALE 1/1
SHEET 1 OF 1

FIRST USED ON VT1ØØ

TITLE 20MA CURRENT LOOP OPTION

SIZE E CODE JA NUMBER VTIXX-AA-Ø REV. B

DIST.

DIS CODE E JA NUMBER VTIXX-AA-

COMPONENT SIDE VIEW

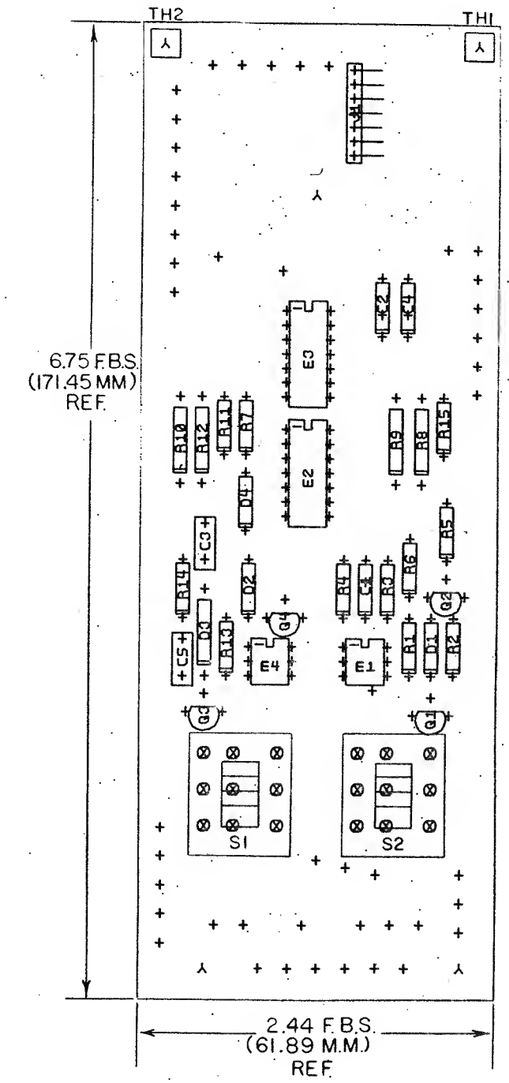

NOTES:

CHK	CHANGE NO	REV

ETCH REV.	C
P.C. DESIGN DATA BASE REV.	C

SIGNATURES	DATE
DRN. Vinny Panchamian	11-16-77
CHK'D. Nicholas P. Kalodner	11-17-77
ENG. Mike Mangassarian	4-13-78
PROJ. ENG. Jeff Gaeth	5/12/78
PROD. Richard Pucci	6/13/78

digital

TITLE
20 MA-ADAPTER

SCALE	SIZE	CODE	NUMBER	REV
2 / 1	D	UA	5413206-0-0	B
SHT. 1 OF 3				

NEXT HIGHER ASSY. B-DD-5413206-0

MS# 180025

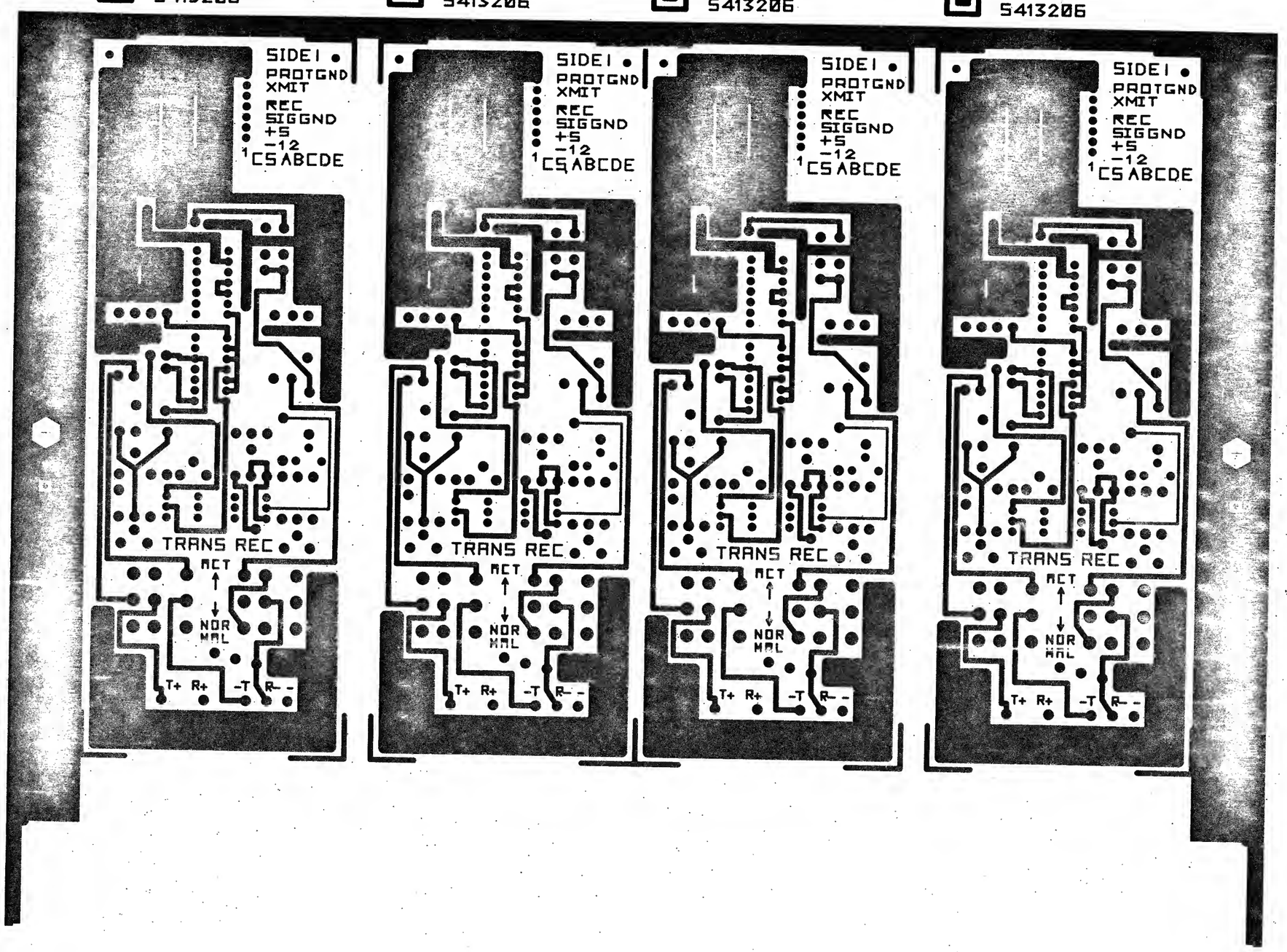

VIEWED FROM SIDE I

REVISIONS		
CHK	CHANGE NO.	REV.

TITLE	SIZE	CODE	NUMBER	REV.
20MA ADAPTOR	D	UA	5413206-0-0	B
SCALE 2:1	SHEET 2 OF 3		DIST	

DEC FORM NO DRD 137

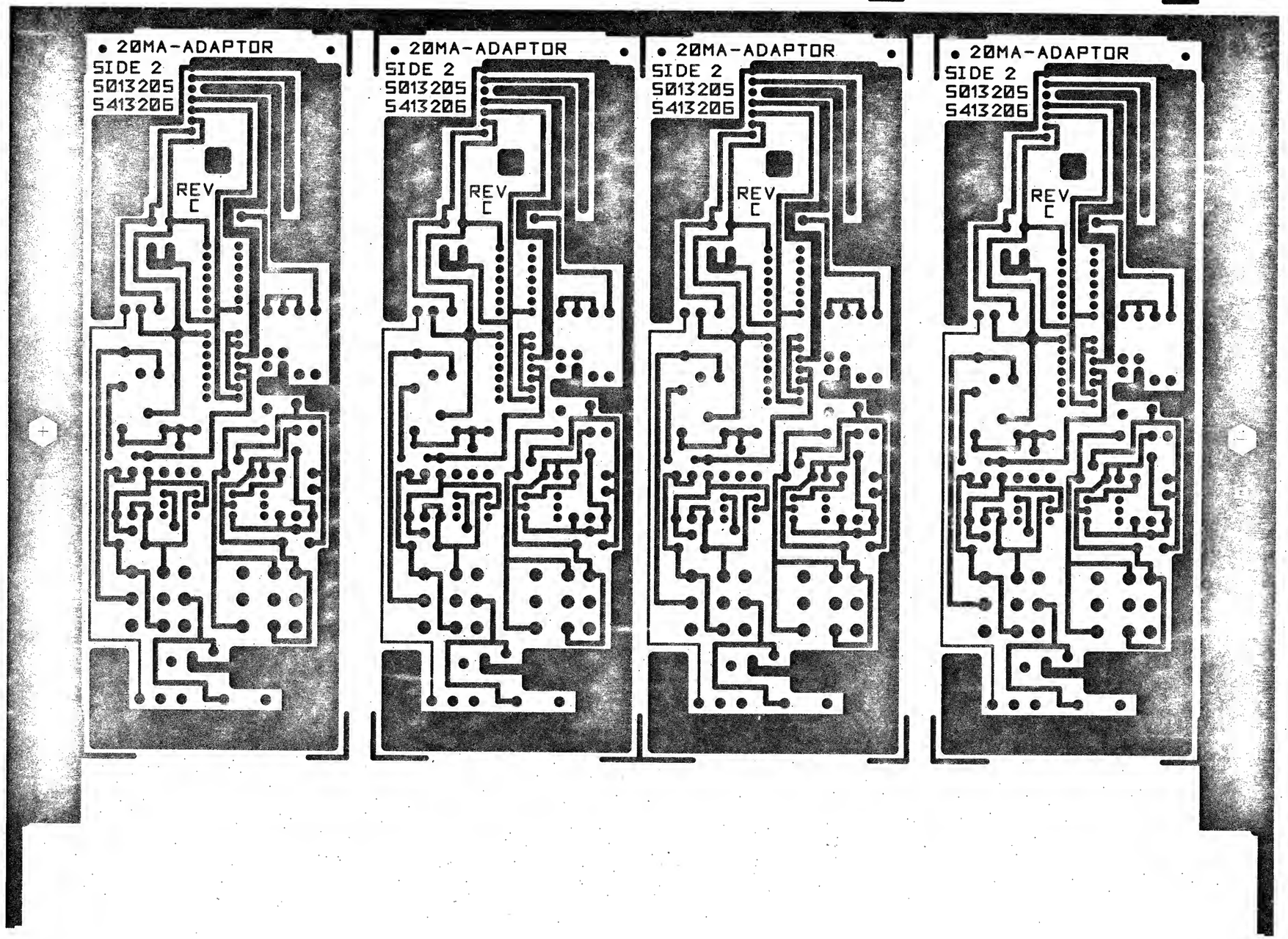

VIEWED FROM SIDE 2

REVISIONS		
CHK	CHANGE NO	REV

TITLE	SIZE	CODE	NUMBER	REV.
20 MA ADAPTOR	D	UA	5413206-0-0	B
SCALE 2:	SHEET 3 OF 3	DIST		

DEC FORM NO DRD 137

D UA 5413206-0-0 B

AUTOMATED BY PRTLST.1D(11) P A R T S L I S T SHEET A1 OF A1

LINE	ITEM	DOCUMENT NUMBER	PART NUMBER	DESCRIPTION	QTY PER VARIATION 00	REFERENCE DESIGNATOR
1	1	D-MD-5013205-0-0	5013205-00	ETCH BOARD FOR 5413206	1	
2	2		1000022-00	270.0 MMF 100V 5%200PPM MICA	2	C3,C5
3	3		1001610-00	.01 MFD 50V +80-20% 250 CER	3	C1,C2,C4
4	4		1105275-00	D 672 TR= 15NS PIV= 60V SI	3	D1,D2,D4
5	5		1105610-00	MCL1301 CL81MA FROM10-80V	1	D3
6	6		1215048-01	CONN 7POS RT ANGLE	1	J1
7	7		1215089-00	SW,SLIDE 3P 1A DBLE THROW	2	S1,S2
8	8		1301522-00	27.0 .25 W 5.0 % CC	1	R2
9	9		1300250-00	150.0 .25 W 5.0 % CC	2	R11,R15
10	10		1300296-00	330.0 .50 W 5.0 % CC	4	R8,R9,R10,R12
11	11		1300309-00	390.0 .25 W 5.0 % CC	2	R1,R14
12	12		1300391-00	1.50 K .25 W 5.0 % CC	1	R7
13	13		1300444-00	3.90 K .25 W 5.0 % CC	1	R6
14	14		1300539-00	120.0 K .25 W 5.0 % CC	1	R4
15	15		1301327-00	68.0 K .25 W 5.0 % CC	1	R13
16	16		1301401-00	750.0 .25 W 5.0 % CC	1	R3
17	17		1301422-00	7.50 K .25 W 5.0 % CC	1	R5
18	18		1509338-00	DEC6531B NPN 310MW SI 40 90 P	2	Q1,Q2
19	19		1510705-00	XA 05 NPN 500MW SI 60 50 P	1	Q4
20	20		1510706-00	XA 55 PNP 500MW SI 60 50 P	1	Q3
21	21		1916959-00	POTOTRANSISTOR	2	E1,E4
22	22		1912817-00	LS37 NAND GATE-QUAD 2IN,P	1	E2
23	23		1913130-00	DEC 14H9A RECEIVER,LINE,QUAD,	1	E3
24	24		1113003-00	IN 5282 PIV=55 I=500M DO35	1	D5

REVISION HISTORY			BASIC PART NO: 5413206											
ENG	ECO NUMBER	REV	SECTION A OF A	DRN:	T. SHETRAWSKI	DATE: 30-MAR-78		D	I	G	I	T	A	L
---	INIT	B	SECTION.VARIATION INDEX	CHKD:	T. SHETRAWSKI	DATE: 30-MAR-78	TITLE	PARTS LIST						
1B	5413206-PN001	C	[A] 00				20 MA ADAPTER							
			[B]	DES.ENG:	M. MORGENSTERN	DATE: 30-MAR-78								
			[C]											
			[D]	RESP.ENG.:	M. MORGENSTERN	DATE: 30-MAR-78	DOCUMENT NUMBER							
			[E]				SIZE	CODE	NUMBER				REV	
			[F]	MFG.ENG.:	T. CORCIARI	DATE: 30-MAR-78	K	PL	5413206-0-DBP				C	
			[H]											
			[J]											
			[K]											
			[L]											
			[M]	ASSEMBLY NUMBER:		TOP DOCUMENT NUMBER:	FILE NAME:						EDIT #	
			[N]	D-UA-5413206-0-0		VT100	13206C.PLS						6	

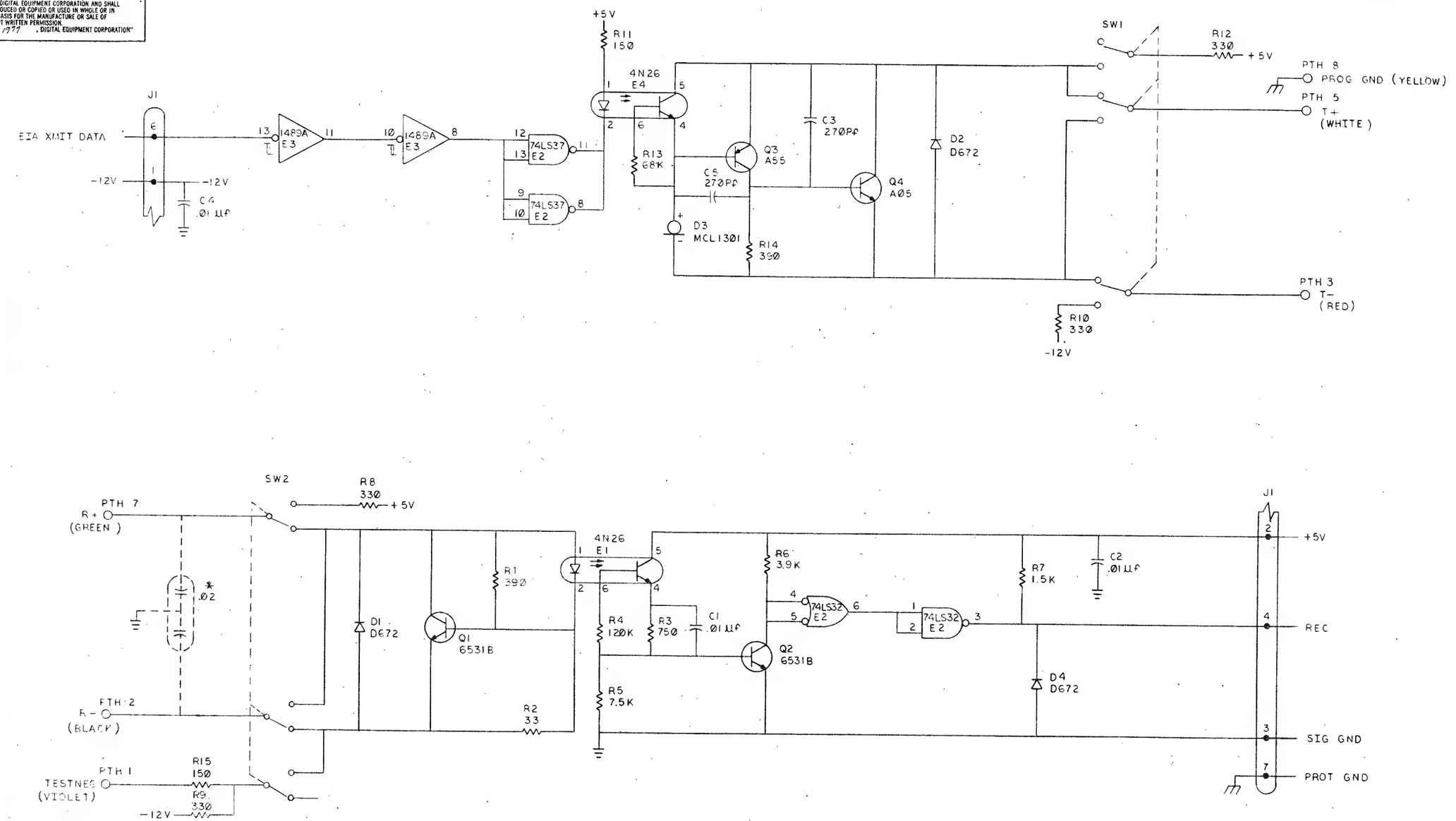

NOTE:
1. * OPTIONAL

DRN.		FIRST USED ON VT100
CHK'D		TITLE 20 MA ADAPTOR
ENG.		
PRDJ. ENG.		
PROD.		
NEXT HIGHER ASSY.	D-UA-5413206-0-0	
SCALE		SIZE D CODE CS NUMBER 5413206-0-1 REV. B
SHEET 1 OF 1		DIST.

digital

PN 1

REVISIONS: REV. | CHANGE NO. | CHK

DEC FORM NO. DRD 102-D

WIRE TABLE

ITEM NO.	DESCRIPTION AWG	COLOR	FROM CONN	WITH	TO CONN	WITH	REMARKS
10	22	YELLOW	PIN 8		ITEM 1 GND		
↑	↑	GREEN	↑ 7		↑ R+		
		WHITE	5		T+		
		RED	3		R−		
		BLACK	↓ 2		T−		
10	22	VIOLET	PIN 1		ITEM 1 −		

NOTES:

1. FOR INDIVIDUAL FIELD SERVICE/ CUSTOMER SPARES SHIPMENTS USE PACKAGING INSTRUCTIONS A-SP-3700550-0-0. FOR BULK INTERPLANT SHIPMENTS USE PACKAGING INSTRUCTIONS A-SP-3700429-0-0, VARIATION-03

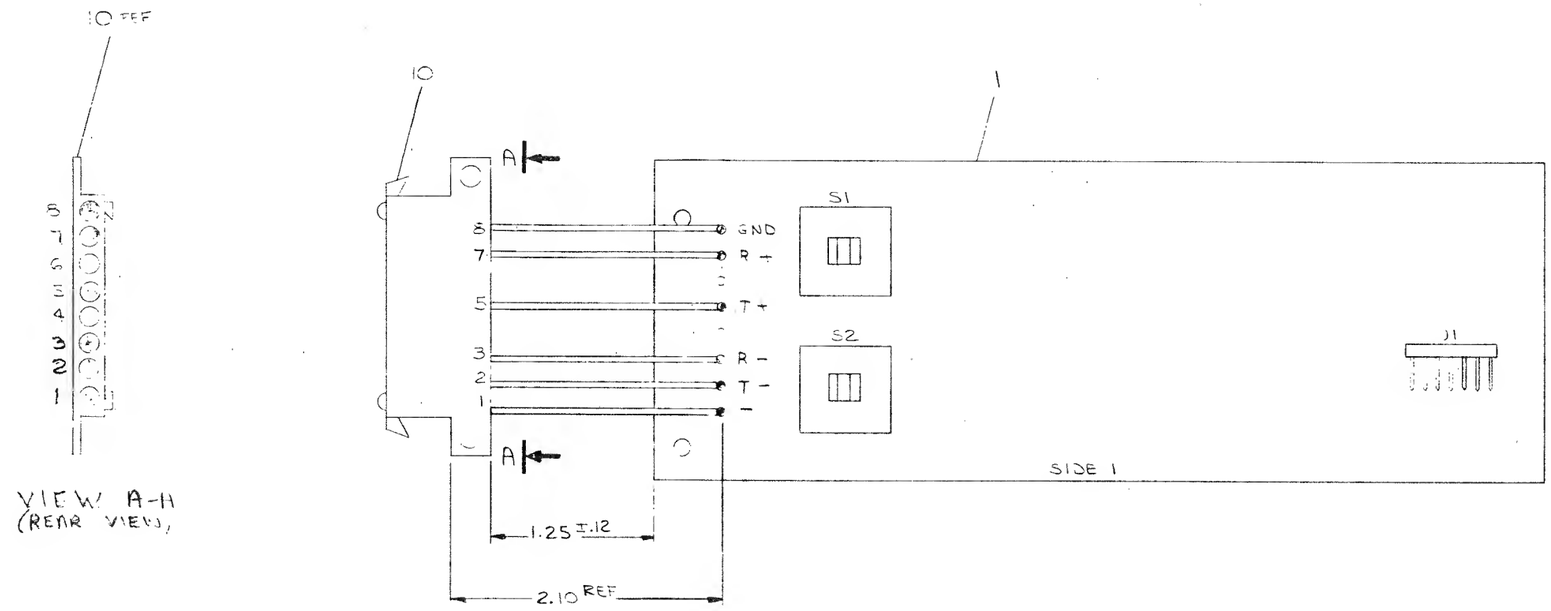

CAUTION: OFF SHEET PARTS LIST EXISTS, SEE K-PL-7015273-0-DBP.

REVISIONS		
CHK	CHANGE NO.	REV.

	DESCRIPTION	DWG./PART NO.	ITEM NO.
QUANTITY & VARIATION			

UNLESS OTHERWISE SPECIFIED DIMENSIONS ARE IN INCHES

ANGLES ±0° 30'	CLASS OF ACCURACY (CHECK ONE)	NOMINAL DIMENSION RANGE INCHES: OVER 0 TO 0.2	OVER 0.2 TO 1.2	OVER 1.2 TO 4.0	OVER 4.0 TO 12.0	OVER 12.0 TO 40.0	OVER 40.0 TO 80.0
SURFACE QUALITY IN MICROINCHES	MEDIUM ☐	±.004	±.008	±.012	±.016	±.024	±.04
	PREFERRED ☐	±.012	±.016	±.025	±.04	±.063	±0.1

THIRD ANGLE PROJECTION

REMOVE BURRS AND BREAK SHARP CORNERS

DO NOT SCALE DWG

MATERIAL SEE PARTS LIST

FINISH

DRN. [illegible] 5-30-77

CHK'D [illegible] 5-31-77

ENG. [illegible] 1-11-78

PROJ. ENG. [illegible] 1-11-78

PRDD. [illegible] 11-Jan-78

NEXT HIGHER ASSY. E-UA-VTIXX-AA-0

SCALE 2/1

SHEET 1 OF 1

FIRST USED ON VT100

digital

TITLE 20 MA ADAPTER ASSY

SIZE	CODE	NUMBER	REV.
D	UA	7015273-0-0	B

DIST.

MASTERPACE P-1555

DEC FORM NO DRD 100-C

WIRE TABLE

ITEM NUMBER	DESCRIPTION AWG	DESCRIPTION COLOR	FROM CONNECTION	FROM WITH	TO CONNECTION	TO WITH
1	24	BLK	J1-1	3	J2-1	3
			J1-2		J2-2	
			J1-3		J2-3	
			J1-4		J2-4	
			J1-6		J2-6	
	24	BLK	J1-7	3	J2-7	3

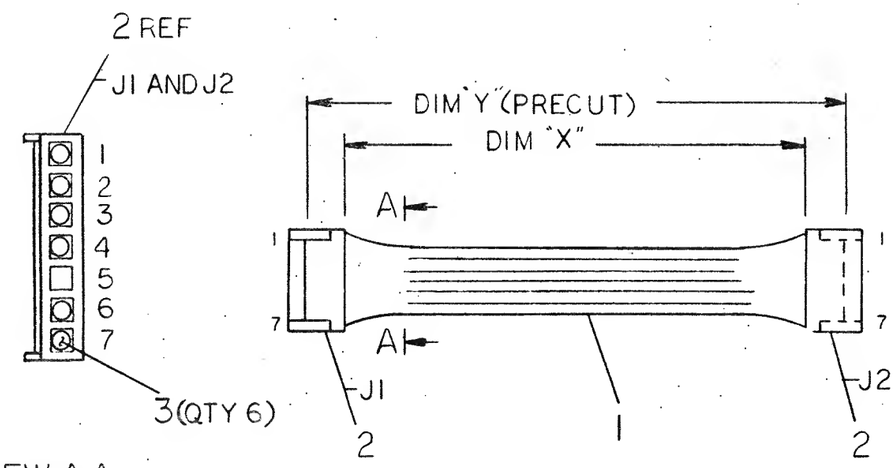

LEGEND

NUMBER	DIM "X" VARIATION	DIM "Y" (PRECUT) REF
7015506-ØB	2.0 IN ±.25 IN.	2.75 IN.

ITEM NO.	DESCRIPTION	DWG./PART NO.	QUANTITY & VARIATION
12	CONTACT, PIN	1214979-00	3
2	HOUSING, 7 CONN	1215047-01	2
A/R	WIRE, 24AWG, STRD (BLK)	9107450-00	1

UNLESS OTHERWISE SPECIFIED DIMENSIONS ARE IN INCHES

ANGLES ±0° 30'	CLASS OF ACCURACY (CHECK ONE)	NOMINAL DIMENSION RANGE INCHES: OVER 0 TO 0.2	OVER 0.2 TO 1.2	OVER 1.2 TO 4.0	OVER 4.0 TO 12.0	OVER 12.0 TO 40.0	OVER 40.0 TO 80.0
SURFACE QUALITY IN MICROINCHES	MEDIUM	±.004	±.008	±.012	±.016	±.024	±.04
	PREFERRED	±.012	±.016	±.025	±.04	±.062	±0.1

THIRD ANGLE PROJECTION

REMOVE BURRS AND BREAK SHARP CORNERS

DO NOT SCALE DWG

MATERIAL SEE PARTS LIST

FINISH —

DRN. 5 Jan 78
CHK'D 9 Jan 78
ENG. 1-23-78
PROJ. ENG. 1-23-78
PROD. 1-24-78

NEXT HIGHER ASSY. E-UA-VTXX-AA

SCALE NONE

SHEET 1 OF 1

FIRST USED ON VT100

digital

TITLE CABLE, INTERNAL 20 MA ADAPTOR

SIZE C | CODE IA | NUMBER 7015506-0-0 | REV. A

DIST.

REVISIONS	CHK	CHANGE NO.	REV.
		7015506-ML0001	A
		2 Spring 28 SEP 79	
		C. JAMES	
		Richard A Pucci 11-1-79	

MARKPEACE P-1988

DEC FORM NO. DRC 160-C

SIZE C | CODE IA | NUMBER 7015506-0-0 | REV. A

LEGEND

NUMBER	DIM "X" VARIATION	DIM "Y" (PRECUT) REF
BCØ5F-15	15 FT. ± 3 IN.	15 FT. .75 IN. ±3 IN.
BCØ5F-9	9 FT. ± 2 IN.	9 FT. .75 IN. ±2 IN.

WIRE TABLE

ITEM NO	DESCRIPTION AWG	DESCRIPTION COLOR	FROM CONNECTION	TO CONNECTION
3	22	BLK	P1-2	P2-3
3	22	RED	P1-3	P2-2
3	22	WHT	P1-5	P2-7
3	22	GRN	P1-7	P2-5

NOTES:

1. ASSEMBLE CABLE I.D. LABEL TO AREA AS SHOWN BELOW.

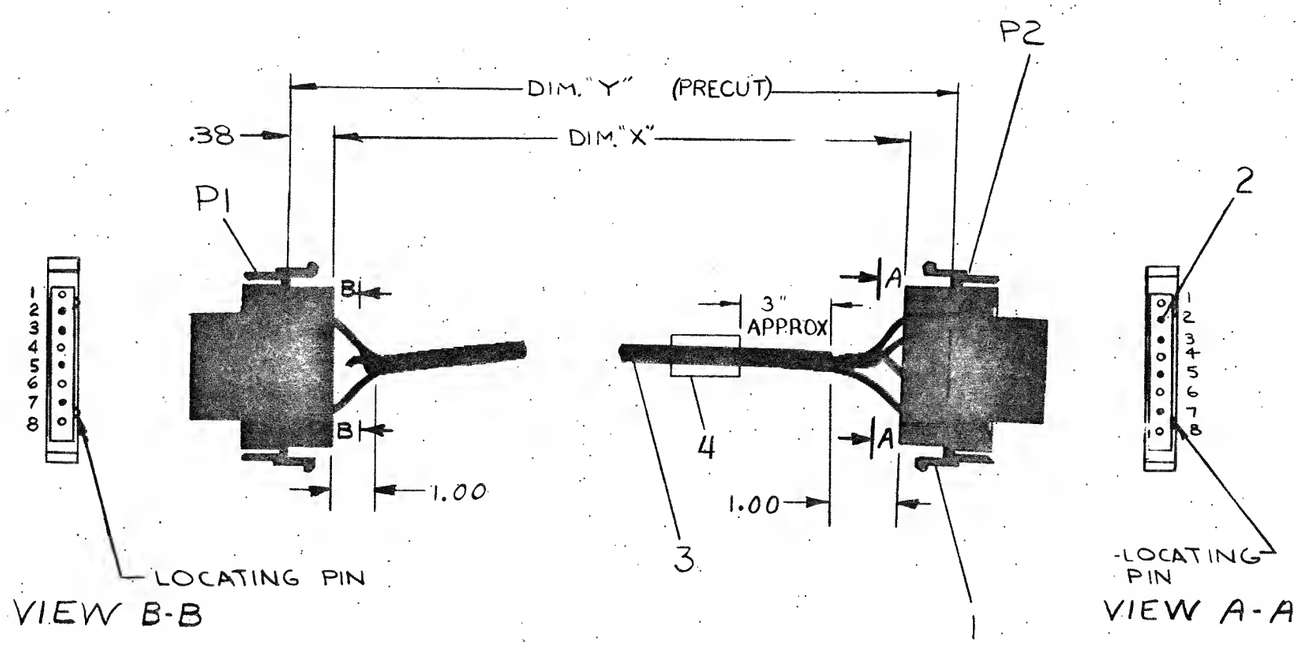

CAUTION: FOR OFF SHEET PARTS LIST SEE K-PL-BCØ5F-Ø-DBP.

REVISIONS	CHK	CHANGE NO.	REV.
		BCØ5F-00001	A
		LA36-00119	B
		BCØ5F-00002	C
		BCØ5F-ML0003	D

R.FITCH 11-9-71
J. BITTO 7/18/75
R.FITCH 22 JUN 76
J. DESUK 19 MAY 81

FIRST USED ON OPTION MODEL: DF11

UNLESS OTHERWISE SPECIFIED
UNLESS OTHERWISE SPECIFIED DIMENSION IN INCHES
TOLERANCES
DECIMALS ± .005 FRACTIONS ± 1/64 ANGLES ± 0°30'
FINAL SURFACE QUALITY
REMOVE BURRS AND BREAK SHARP CORNERS

MATERIAL

FINISH

QTY.	DESCRIPTION	PART NO.	ITEM NO.
	PARTS LIST		

DRN.		DATE 10/6/71
CHK'D.	R. Milan	DATE 10/8/71
ENG.	Robert Fitch	DATE 10-19-71
PROJ. ENG.	Robert Fitch	DATE 10-19-71
PROD.	Paul Frazier	DATE 10-19-71
NEXT HIGHER ASS'Y		
SCALE		
SHEET 1 OF 1		

digital EQUIPMENT CORPORATION
MAYNARD, MASSACHUSETTS

TITLE
CABLE INTERFACE
BCØ5F

SIZE	CODE	NUMBER	REV.
C	UA	BCØ5F Ø-Ø	D

DIST. 3

DEC FORM NO. DRC

ML-1

COMPONENT SIDE VIEW

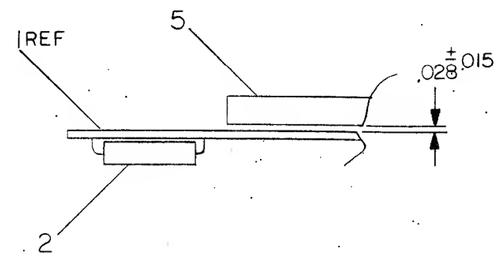

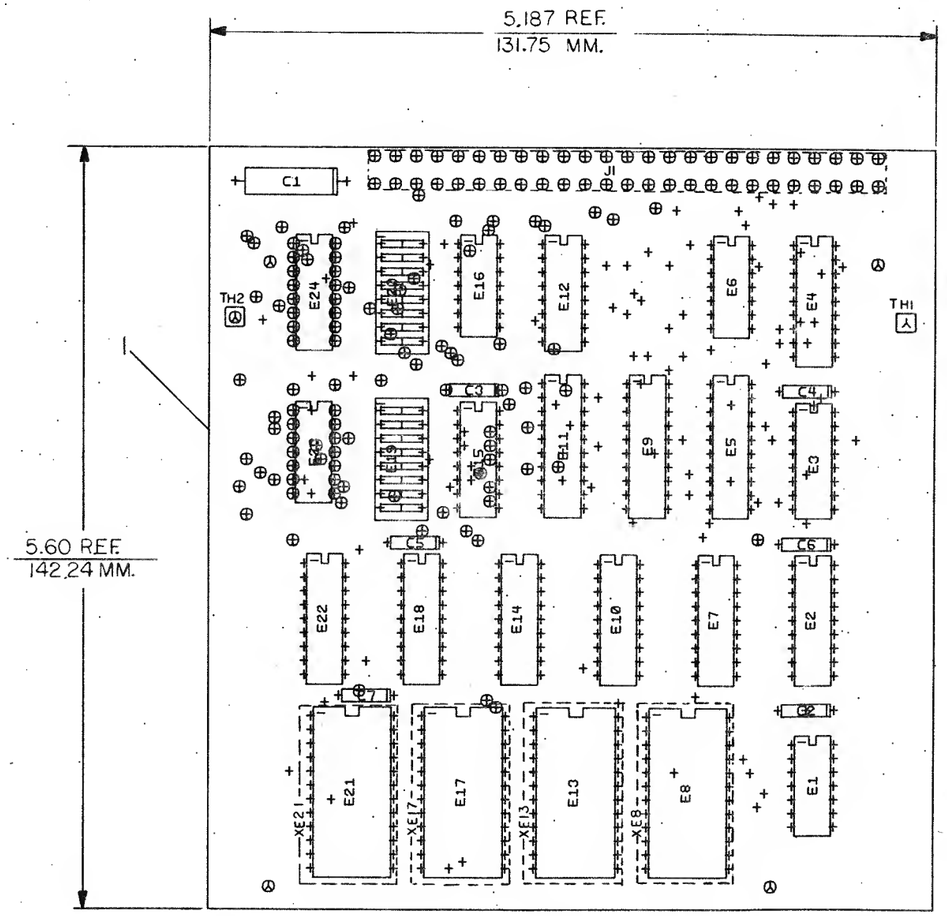

NOTES: J1 CONN MOUNTED ON SIDE 2

STEP E	↑ Y AXIS — STEP — TIMES 2ML 2
REPEAT	→ X AXIS 5.250 STEP 1 TIMES

CHK	CHANGE NO	REV
	5413097MLOOS	F
	REDRAWN	
	R.PUCCI	

ETCH REV. C-P 3

SIGNATURES	DATE
DRN.	
CHK'D.	
MECH. ENG.	
PROJ. ENG.	
PROD.	

digital

TITLE VT100 ADVANACED VIDEO

SCALE 2/1	SIZE	CODE	NUMBER	REV
SHT. 1 OF 1	D	UA	5413097-0-0	F
NEXT HIGHER ASSY. B-DD-5413097-0				

1 WO# 104159

AUTOMATED BY PRTLST.1D(11) P A R T S L I S T SHEET A1 OF A1

LINE	ITEM	DOCUMENT NUMBER	PART NUMBER	DESCRIPTION	QTY PER VARIATION 00	01	02	03	REFERENCE DESIGNATOR
1	1	D-MD-5013096-0-0	5013096-00	DRILL & ETCH DRAWING	1	1	1	1	
2	2		1005306-00	6.8MFD 35V 10% S.TANT	1	1	1	1	C1
3	3		1012784-00	.047 MFD 50V +80-20% CER	6	6	6	6	C2-C7
4	4		1215006-06	SOCKET 24PIN IC LOW PROFILE	4	4	4	4	XE8,XE13,XE17,XE21
5	5		1214060-01	HEADER.150 50POS	1	1	1	1	J1
6	6		1300005-03	R NETWORK 13-10K 5.0 % 14PIN	1	1	1	1	E1
7	7		1300005-07	R NETWORK 15-4.7K 5.0 % 16PIN	1	1	1	1	E15
8	8		1912801-00	LS02 NOR-GATE-QUAD 2IN	1	1	1	1	E6
9	9		1912803-00	74LS04 INVERTER GATE,HEX	1	1	1	1	E23
10	10		1912809-00	LS15 NAND GATE-TRIPLE 3IN	1	1	1	1	E16
11	11		1912842-00	LS138 DECODER-THREE INPUT,	1	1	1	1	E12
12	12		1912843-00	LS139 DECODER, 2 OF 4(DUAL	2	2	2	2	E3,E24
13	13		1912863-00	LS273 FF-D OCTAL W/CLEAR	1	1	1	1	E5
14	14		1914213-00	81LS97 BUFFER GATE-OCTAL 2I	2	2	2	2	E9,E11
15	15		2113106-01	1K MOS RAM 250NS	1	1	1	1	E4
16	16		2114212-00	P 2114-2 RAM,1024X4,STATIC	6	6	6	6	E2,E7,E10,E14,E18,E22
17	18		1211164-04	SW,DIP 1P 1A 8POS	2	2	2	2	E19,E20
18	19		23069E2-00	E2-02,E2-04 RO	-	1	-	-	E21
19	20		23099E2-00	E2-02	-	-	1	-	E21
20	21		23100E2-00	E2-02	-	-	1	-	E17
21	22		23093E2-00	E2-02,E2-04	-	-	-	1	E21
22	23	A-SP-3700554-0-0	3700554-00	PKG MODULE 5413097	REF	REF	REF	REF	
23	24	A-SP-3700438-0-0	3700438-05	PKG. BULK CARTON 9906476-29	REF	REF	REF	REF	

24 NOTE: FOR INDIVIDUAL FIELD SERVICE/CUSTOMER SPARES SHIPMENT USE PACKAGING INSTRUCTION A-SP-3700554-0-0.
25 NOTE: FOR BULK INTERPLANT SHIPMENT USE PACKAGING INSTRUCTIONS A-SP-3700438-00.

REVISION HISTORY			BASIC PART NO: 5413097										
ENG	ECO NUMBER	REV	SECTION A OF A	DRN: T. SHETRAWSKI	DATE: 10-MAR-78	D	I	G	I	T	A	L
	INIT	A	SECTION.VARIATION INDEX	CHK'D: T. SHETRAWSKI	DATE: 10-MAR-78	TITLE PARTS LIST						
---	5413097-ML002	C	[A] 00,01,02,03			VT100 ADV VIDEO						
CJ	5413097-ML003	D	[B]									
CJ	5413097-ML004	E	[C]	DES.ENG: D. PUCCI	DATE: 10-MAR-78							
DP	5413097-ML005	F	[D]									
RB	5413097-ML006	H	[E]			DOCUMENT NUMBER						
			[F]	RESP.ENG.: D. PUCCI	DATE: 10-MAR-78							
			[H]			SIZE	CODE	NUMBER		REV		
			[J]									
			[K]	MFG.ENG.: T. CORCIARI	DATE: 10-MAR-78	K	PL	5413097-0-DBP		H		
			[L]									
			[M]	ASSEMBLY NUMBER:	TOP DOCUMENT NUMBER:	FILE NAME:				EDIT #		
			[N]	D-UA-5413097-0-0	B-DD-5413097-0-0	Z1081H.PLS				9		

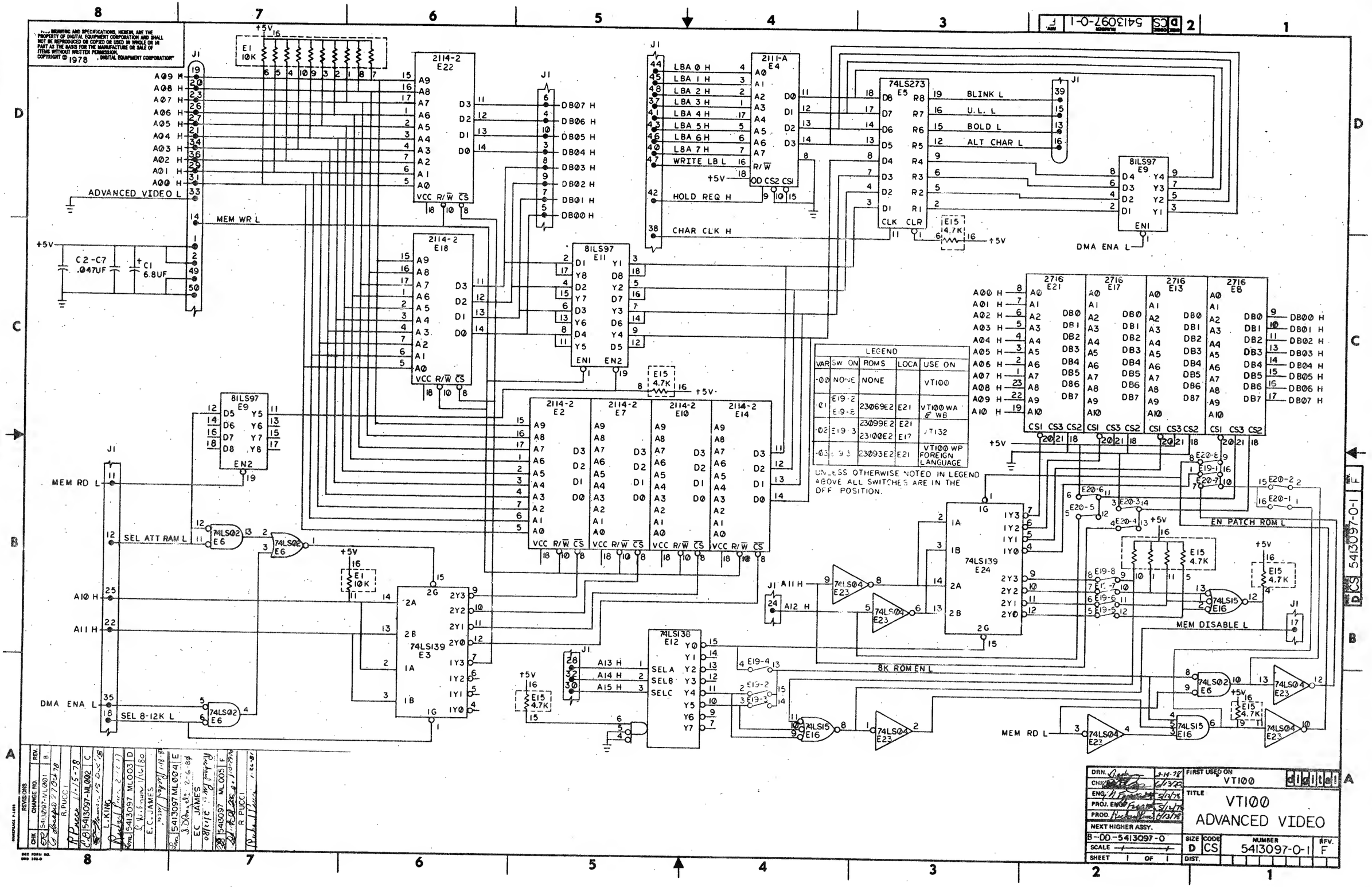

DIGITAL EQUIPMENT CORPORATION
PARTS LIST

MADE BY	D. HEALY	CHECKED	D. HEALY	SECTION	A1
DATE	14-JUN-78	DATE	14-JUN-78		
ENG	E. WEDEKING	PROD	K. HOFFMAN	ISSUED SECTION	A2
DATE	10-JUL-78	DATE	10-JUL-78		

ITEM NO.	DRAWING NO.	PART NO.	DESCRIPTION	VT1ØØ-AA	VT1ØØ-AB	VT1ØØ-NA	VT1ØØ-NB	VT1ØØ-WA	VT1ØØ-WB	VT1ØØ-WC	VT1ØØ-WD	VT1ØØ-WE	VT1ØØ-WF	VT1ØØ-WG	VT1ØØ-WH	NOTES: REF DESIGNATION
1	EK-VT1ØØ-UG-001	EK-VT1ØØ-UG	GUIDE, USERS VT1ØØ	1	1	1	1	1	1	1	1	1	1	1	1	
2		3615741	LABEL, SET-UP, VT1ØØ	1	1	1	1	1	1	-	-	-	-	-	-	
3		VT1ØØ-AA	TERM., VIDEO, W/115V PLUG	1	-	-	-	-	-	-	-	-	-	-	-	
4		VT1ØØ-AB	TERM., VIDEO, W/23ØV PLUG	-	1	-	-	-	-	-	-	-	-	-	-	
5		VT1ØØ-NA	TERM., VIDEO, DECFORM,W/115V PLUG	-	-	1	-	-	-	-	-	-	-	-	-	
6		VT1ØØ-NB	TERM., VIDEO, DECFORM,W/23ØV PLUG	-	-	-	1	-	-	-	-	-	-	-	-	
7		VT1ØØ-WA	TERM., VIDEO, WORD PROCESSING, W/115V PLUG.	-	-	-	-	1	-	-	-	-	-	-	-	
8		VT1ØØ-WB	TERM., VIDEO, WORD PROCESSING, W/230V PLUG.	-	-	-	-	-	1	-	-	-	-	-	-	
9	A-SP-VT1ØØ-W-Ø		INSTALLATION NOTES, WORD PROCESSING TERMINAL.	-	-	-	-	1	1	1	1	1	1	1	1	
10		VT1ØØ-WC	TERM, VIDEO, FR. CANADIAN WP W/ 115V PLUG	-	-	-	-	-	-	1	-	-	-	-	-	
11		VT1ØØ-WD	TERM, VIDEO, FR. CANADIAN WP W/ 230V PLUG	-	-	-	-	-	-	-	1	-	-	-	-	
12		VT1ØØ-WE	TERM, VIDEO, FRENCH WP W/115V PLUG	-	-	-	-	-	-	-	-	1	-	-	-	
13		VT1ØØ-WF	TERM, VIDEO, FRENCH WP W/230V PLUG	-	-	-	-	-	-	-	-	-	1	-	-	
14		VT1ØØ-WG	TERM, VIDEO, DUTCH,WP W/115V PLUG	-	-	-	-	-	-	-	-	-	-	1	-	
15		VT1ØØ-WH	TERM, VIDEO, DTUCH,WP W/230V PLUG	-	-	-	-	-	-	-	-	-	-	-	1	
16		VT1ØØ-WJ	TERM, VIDEO, GERMAN WP W/115V PLUG	-	-	-	-	-	-	-	-	-	-	-	-	
17		VT1ØØ-WK	TERM, VIDEO, GERMAN WP W/230V PLUG	-	-	-	-	-	-	-	-	-	-	-	-	
18		VT1ØØ-WY	TERM, VIDEO, WP W/115V PLUG	-	-	-	-	-	-	-	-	-	-	-	-	

E.C.O. NO. MLØ32 MLØ37

DRB 125

TITLE	ASSY NO.	SIZE	CODE	NUMBER	REV.
SHIPPING LIST VT1ØØ	—	B	PL	VT1ØØ-Ø	E
	SHEET 1 OF 4	INSERTION PARTS LIST DATA BASE REV			

DIGITAL EQUIPMENT CORPORATION
PARTS LIST

MADE BY	D. HEALY	CHECKED	D. HEALY	SECTION	A2
DATE	14-JUN-78	DATE	14-JUN-78		
ENG	E. WEDEKING	PROD	K. HOFFMAN	ISSUED SECTION	A2
DATE	10-JUL-78	DATE	10-JUL-78		

NOTES:

ITEM NO.	DRAWING NO.	PART NO.	DESCRIPTION	VT1ØØ-AA	VT1ØØ-AB	VT1ØØ-NA	VT1ØØ-NB	VT1ØØ-WA	VT1ØØ-WB	VT1ØØ-WC	VT1ØØ-WD	VT1ØØ-WE	VT1ØØ-WF	VT1ØØ-WG	VT1ØØ-WH	REF DESIGNATION
19		VT1ØØ-WZ	TERM, VIDEO, WP W/230V PLUG	-	-	-	-	-	-	-	-	-	-	-	-	
20		3615741-01	LABEL, SET-UP, VT1ØØ FOR SYSTEMS	-	-	-	-	-	-	1	1	1	1	1	1	
21		AA-H989A-TA	VT1ØØ FOREIGN LANGUAGE SUPPLEMENT	-	-	-	-	-	-	1	1	1	1	1	1	
22		VT1ØØ-LA	TERM, VIDEO, W/P4Ø TUBE	1	-	-	-	-	-	-	-	-	-	-	-	
23		VT1ØØ-LB	TERM, VIDEO, W/P4Ø TUBE	-	1	-	-	-	-	-	-	-	-	-	-	
24		VT1ØØ-PA	VT1ØØ-AA EXCEPT DARK GRAY 12ØV PRIVATE BRAND	-	-	-	-	-	-	-	-	-	-	-	-	
25		VT1ØØ-PB	VT1ØØ-AB EXCEPT DARK GRAY 24ØV PRIVATE BRAND	-	-	-	-	-	-	-	-	-	-	-	-	
26		VT1ØØ-PC	VT1ØØ-PA WITHOUT ELECTRONICS 12ØV PRIVATE BRAND	-	-	-	-	-	-	-	-	-	-	-	-	
27		VT1ØØ-PD	VT1ØØ-PB WITHOUT ELECTRONICS 24ØV PRIVATE BRAND	-	-	-	-	-	-	-	-	-	-	-	-	
28		VT1ØØ-PE	VT1ØØ-PA WITHOUT ELECTRONICS & NO KEYBOARD 12ØV PRIVATE BRAND	-	-	-	-	-	-	-	-	-	-	-	-	
29		VT1ØØ-PF	VT1ØØ-PB WITHOUT ELECTRONICS & NO KEYBOARD 24ØV PRIVATE BRAND	-	-	-	-	-	-	-	-	-	-	-	-	
30		EK-VT100-RC	VT100 PROGRAM REF CARD	1	1	1	1	1	1	1	1	1	1	1	1	

E.C.O. NO.

DRB 125

TITLE	ASSY NO.	SIZE	CODE	NUMBER	REV.
SHIPPING LIST VT1ØØ	—	B	PL	VT1ØØ-Ø	E
	SHEET 2 OF 4	INSERTION PARTS LIST DATA BASE REV			

DIGITAL EQUIPMENT CORPORATION
PARTS LIST

MADE BY	D. HEALY	CHECKED	D. HEALY	SECTION	B1
DATE	14-JUN-78	DATE	14-JUN-78		
ENG	E. WEDEKING	PROD	K. HOFFMAN	ISSUED SECTION	B2
DATE	10-JUL-78	DATE	10-JUL-78		

NOTES:

ITEM NO.	DRAWING NO.	PART NO.	DESCRIPTION	VT1ØØ-WJ	VT1ØØ-WK	VT1ØØ-WY	VT1ØØ-WZ	VT1ØØ-LA	VT1ØØ-LB	VT1ØØ-PA	VT1ØØ-PB	VT1ØØ-PC	VT1ØØ-PD	VT1ØØ-PE	VT1ØØ-PF	REF DESIGNATION
1	EK-VT1ØØ-UG-001	EK-VT1ØØ-UG	GUIDE, USERS VT1ØØ	1	1	1	1	1	1	-	-	-	-	-	-	
2		3615741	LABEL, SETUP, VT1ØØ	-	-	-	-	1	1	-	-	-	-	-	-	
3		VT1ØØ-AA	TERM., VIDEO, W/115V PLUG	-	-	-	-	-	-	-	-	-	-	-	-	
4		VT1ØØ-AB	TERM., VIDEO, W/23ØV PLUG	-	-	-	-	-	-	-	-	-	-	-	-	
5		VT1ØØ-NA	TERM., VIDEO,DECFORM,W/115V PLUG	-	-	-	-	-	-	-	-	-	-	-	-	
6		VT1ØØ-NB	TERM., VIDEO,DECFORM,W/23ØV PLUG	-	-	-	-	-	-	-	-	-	-	-	-	
7		VT1ØØ-WA	TERM., VIDEO, WORD PROCESSING W/115V PLUG.	-	-	1	-	-	-	-	-	-	-	-	-	
8		VT1ØØ-WB	TERM., VIDEO, WORD PROCESSING, W/ 23ØV PLUG.	-	-	-	1	-	-	-	-	-	-	-	-	
9	A-SP-VT1ØØ-W-Ø		INSTALLATION NOTES, WORD PROCESSING TERMINAL.	1	1	1	1	-	-	-	-	-	-	-	-	
10		VT1ØØ-WC	TERM, VIDEO, FR. CANADIAN WP W/ 115V PLUG	-	-	-	-	-	-	-	-	-	-	-	-	
11		VT1ØØ-WD	TERM, VIDEO, FR. CANADIAN WP W/ 23ØV PLUG	-	-	-	-	-	-	-	-	-	-	-	-	
12		VT1ØØ-WE	TERM, VIDEO,FRENCH WP W/115V PLUG	-	-	-	-	-	-	-	-	-	-	-	-	
13		VT1ØØ-WF	TERM, VIDEO,FRENCH WP W/230V PLUG	-	-	-	-	-	-	-	-	-	-	-	-	
14		VT1ØØ-WG	TERM, VIDEO,DUTCH WP W/115V PLUG	-	-	-	-	-	-	-	-	-	-	-	-	
15		VT1ØØ-WH	TERM, VIDEO,DUTCH WP W/230V PLUG	-	-	-	-	-	-	-	-	-	-	-	-	
16		VT1ØØ-WJ	TERM, VIDEO,GERMAN WP W/115V PLUG	1	-	-	-	-	-	-	-	-	-	-	-	
17		VT1ØØ-WK	TERM, VIDEO,GERMAN WP W/230V PLUG	-	1	-	-	-	-	-	-	-	-	-	-	
18		VT1ØØ-WY	TERM, VIDEO, WP W/115V PLUG	-	-	1	-	-	-	-	-	-	-	-	-	

E.C.O. NO.

DRB 125

TITLE SHIPPING LIST VT1ØØ	ASSY NO. —//—	SIZE B	CODE PL	NUMBER VT1ØØ-Ø	REV. E
	SHEET 3 OF 4	INSERTION PARTS LIST DATA BASE REV		

DIGITAL EQUIPMENT CORPORATION
PARTS LIST

MADE BY	D. HEALY	CHECKED	D. HEALY	SECTION	B2
DATE	14-JUN-78	DATE	14-JUN-78		
ENG	E. WEDEKING	PROD	K. HOFFMAN	ISSUED SECTION	B2
DATE	10-JUL-78	DATE	10-JUL-78		

ITEM NO.	DRAWING NO.	PART NO.	DESCRIPTION	VT1ØØ-WJ	VT1ØØ-WK	VT1ØØ-WY	VT1ØØ-WZ	VT1ØØ-LA	VT1ØØ-LB	VT1ØØ-PA	VT1ØØ-PB	VT1ØØ-PC	VT1ØØ-PD	VT1ØØ-PE	VT1ØØ-PF	NOTES: REF DESIGNATION
19		VT1ØØ-WZ	TERM, VIDEO, WP W/230V PLUG	-	-	-	1	-	-	-	-	-	-	-	-	
20		3615741-01	LABEL, SET-UP, VT1ØØ FOR SYSTEMS	1	1	1	1	-	-	-	-	-	-	-	-	
21		AA-H989A-TA	VT1ØØ FOREIGN LANGUAGE SUPPLEMENT	1	1	1	1	-	-	-	-	-	-	-	-	
22		VT1ØØ-LA	TERM, VIDEO, W/P4Ø TUBE	-	-	-	-	1	-	-	-	-	-	-	-	
23		VT1ØØ-LB	TERM, VIDEO, W/P4Ø TUBE	-	-	-	-	-	1	-	-	-	-	-	-	
24		VT1ØØ-PA	VT1ØØ-AA EXCEPT DRAK GRAY 12ØV PRIVATE BRAND	-	-	-	-	-	-	1	-	-	-	-	-	
25		VT1ØØ-PB	VT1ØØ-AB EXCEPT DARK GRAY 24ØV PRIVATE BRAND	-	-	-	-	-	-	-	1	-	-	-	-	
26		VT1ØØ-PC	VT1ØØ-PA WITHOUT ELECTRONICS 12ØV PRIVATE BRAND	-	-	-	-	-	-	-	-	1	-	-	-	
27		VT1ØØ-PD	VT1ØØ-PB WITHOUT ELECTRONICS 24ØV PRIVATE BRAND	-	-	-	-	-	-	-	-	-	1	-	-	
28		VT1ØØ-PE	VT1ØØ-PA WITHOUT ELECTRONICS & NO KEYBOARD 12ØV PRIVATE BRAND	-	-	-	-	-	-	-	-	-	-	1	-	
29		VT1ØØ-PF	VT1ØØ-PB WITHOUT ELECTRONICS & NO KEYBOARD 24ØV PRIVATE BRAND	-	-	-	-	-	-	-	-	-	-	-	1	
30		EK-VT100-RC	VT100 PROGRAM REF CARD	1	1	1	1	1	1	1	1	1	1	1	1	

E.C.O. NO.

DRB 125

TITLE	ASSY NO.	SIZE	CODE	NUMBER	REV.
SHIPPING LIST VT1ØØ	—//—	B	PL	VT1ØØ-Ø	E
	SHEET 4 OF 4	INSERTION PARTS LIST DATA BASE REV			

DIGITAL EQUIPMENT CORPORATION
MAYNARD, MASSACHUSETTS

ENGINEERING SPECIFICATION

DATE 6/28/79

TITLE VT100-W Word Processing Terminals Installation Notes

REVISIONS

REV	DESCRIPTION	CHG NO	ORIG	DATE	APPD BY	DATE
A	ECO CHANGE	VT100-ML028	W.TREMBLAY	3/12/79	W. Tremblay (Rev)	11/1/80

The VT100 family of Word Processing Terminals consists of the basic VT100 terminal assembly to which, parts have been added or substituted to make unique terminals, dedicated to word processing applications in various languages.

Table 1 lists the unique parts make-up of the various VT100 Word Processing Terminals.

The VT100 incorporates a user set-up option which is activated by the set-up key on the keyboard. To maintain order among DEC Word Processing Systems using the VT100, a WORD PROCESSING STANDARD SET-UP had been defined. These settings are preset at the factory.

Table 2 shows the correct set-up B settings for VT100-WA and VT100-WB variations. Table 3 shows the correct settings for VT100-WC through VT100-WK, VT100-WY, and VT100-WZ

Verify that the terminal is set-up correctly. If necessary, change incorrect settings then store the settings in the VT100's semi-permanent memory (Ref: VT100 User Guide EK-VT100-0011).

Unique to the VT100 Word Processing Terminal is a Word Processing Advanced Video Module P/N 5413097-xx. Table 5 illustrates ROM and jumper placement for the various modules.

Also unique to the VT100 Foreign Word Processing Terminals is a language set-up mode called the set-up C mode. Table No. 4 explains how to use the set-up C mode to select any one of 5 different languages.

Table 1
Word Processing VT100 Unique Parts

Variation	Basic Unit	Unique Part	Part Number
VT100-WA	VT100-AA	Word Proc. Key Bd.	7015765-03
		Word Proc. Advanced	
		Video Module	5413097-01
VT100-WB	VT100-AB	Word Proc. Key Bd.	7015765-03
		Word Proc. Advanced	
		Video Module	5413097-01
VT100-WC		French Canadian Key Bd.	7015765-05
		For. Language Advanced	
		Video Module w/ROM A	5413097-03
		Basic Video Board	5413009-02

ENG	APPD	SIZE	CODE	NUMBER	REV
Walt Tremblay	Don Young	A	SP	VT100-W	A

EN-1079A-16-R873-(392)

SHEET 1 OF 8

Table 1 (continued)
Word Processing VT100 Unique Parts

Variation	Basic Unit	Unique Part	Part Number
VT100-WD		French Canadian Key Bd.	7015765-05
		For. Language Advanced	
		Video Module w/ROM A	5413097-03
		Basic Video Board	5413009-02
VT100-WE		French Key Bd.	7015765-06
		For. Language Advanced	
		Video Module w/ROM A	5413097-03
		Basic Video Board	5413009-02
VT100-WF		French Key Bd.	7015765-06
		For. Language Advanced	
		Video Module w/ROM A	5413097-03
		Basic Video Board	5413009-02
VT100-WG		Dutch Key Bd.	7015765-07
		For. Language Advanced	
		Video Module w/ROM A	5413097-03
		Basic Video Board	5413009-02
VT100-WH		Dutch Key Bd.	7015765-07
		For. Language Advanced	
		Video Module w/ROM A	5413097-03
		Basic Video Board	5413009-02
VT100-WJ		German Key Bd.	7015765-08
		For. Language Advanced	
		Video Module w/ROM A	5413097-03
		Basic Video Board	5413009-02
VT100-WK		German Key Bd.	7015765-08
		For. Language Advanced	
		Video Module w/ROM A	5413097-03
		Basic Video Board	5413009-02
VT100-WY		Word Proc. Key Bd.	7015765-03
		For. Language Advanced	
		Video Module w/ROM A	5413097-03
		Basic Video Board	5413009-02
VT100-WZ		Word Proc. Key Bd.	7015765-03
		For. Language Advanced	
		Video Module w/ROM A	5413097-03
		Basic Video Board	5413009-02

Table 2
Word Processing User Option Set-up "B"

VT100-WA Set-up B

```
SET-UP B
TO EXIT PRESS "SET-UP"



1100  0101  0000  0010     T SPEED 9600  R SPEED 9600
```

SET-UP B mode may only be entered from SET-UP A mode. To enter SET-UP B from SET-UP A, press the 5 key on the main keyboard. The display will have a presentation similar to the figure shown above.

The table shown below explains the function of each bit and their proper setting.

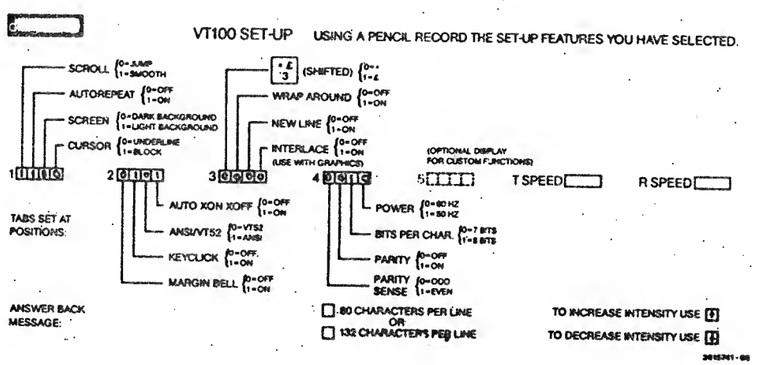

Table 2
Word Processing User Option Set-up "B"

VT100-WB Set-up B

```
SET-UP B
TO EXIT PRESS "SET-UP"



1100  0101  1000  0011     T SPEED 9600  R SPEED 9600
```

SET-UP B mode may only be entered from SET-UP A mode. To enter SET-UP B from SET-UP A, press the 5 key on the main keyboard. The display will have a presentation similar to the figure shown above.

The table shown below explains the function of each bit and their proper setting.

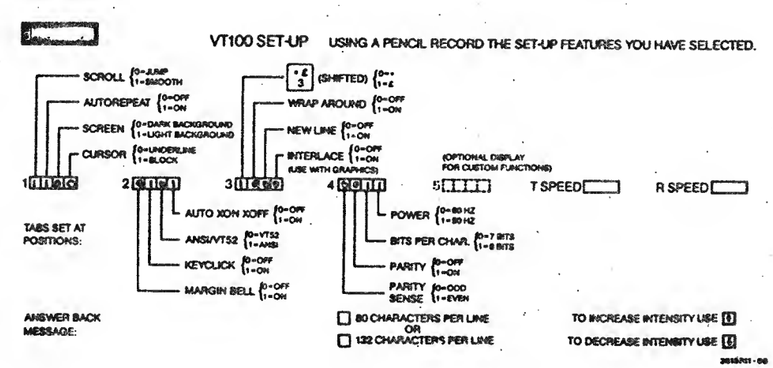

Table 3
Word Processing User Option Set-up "B"

VT100-WC-WK, WY, and WZ Set-up B

SET-UP B
TO EXIT PRESS "SET-UP"

1100 0101 0000 0001 P=80 T 9600 R 9600

NOTE: For WC and WD variations Group 4 should contain all zero's, unless 50 Hz, local echo and/or parity check is desired.

SET-UP B mode may only be entered from SET-UP A mode. To enter SET-UP B from SET-UP A, press the 5 key on the main keyboard. The display will have a presentation similar to the figure shown above.

The table shown below explains the function of each bit and their proper setting.

If the parity setting (P=?) is incorrect, it can be changed by holding the shift key down and pressing the P key repeatedly until the desired setting is displayed.

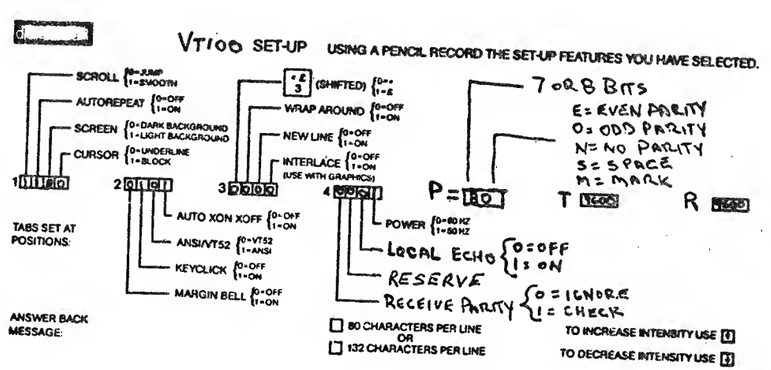

A

Table 4
Word Processing User Option Set-Up C

The SEt-up C mode for VT100 variatons -WC through WK, -WY and -WZ allows you to select any one of the following languages.

French Canadian
French
Dutch
German
English

SET-UP C mode may only be entered from SET-UP A mode. To enter SET-UP C from SET-UP A, press the 5 key on the main keyboard twice. The display will have a presentation similar to the figure shown below.

SET-UP C
TO EXIT PRESS "SET-UP"

DISPLAY ENGLISH KEYBOARD ENGLISH

To change the language setting for the display and/or keybaord, advance the cursor until it is positioned above the incorrect language setting then press the number 6 key repeatedly until the desired language setting is displayed.

For terminals set-up for French all numbers (0-9) on the main keyboard are in the shifted position, therefore, they can only be accessed by holding the shift key down and then pressing the desired number key.

It is suggested that the "Caps Lock" key ("Shift Lock" in the French keyboard mode) be always engaged when doing set-up functions to eliminate confusion during set-up.

Table 5
Word Processing Adv. Video Module
ROM and Jumper Locations

VT100-WA & WB 5413097-01

```
**************************************************************

+----------+--------------------+-+
|          |     J1             | |
|          +--------------------+ |
|                                |
|          +W1+  <--  in         |
|          +--+                  |
|          +--+                  |
|          +--+  <-- out         |
|          +--+                  |
|          +--+                  |
|          +W7+  <--  in         |
|          +--+                  |
|          +--+                  |
|          +--+                  |
|                                |
|          +--+                  |
|          +--+  <-- out         |
|                                |
|          +--+  <-- out         |
|          +--+                  |
|                                |
| +-----+ +-----+ +-----+ +-----+ |
| | E19 | |BLANK| |BLANK| |BLANK| |
| | 23- | | | | | | | | | |
| |069E2| | | | | | | | | |
| | -00 | | | | | | | | | |
| +-----+ +-----+ +-----+ +-----+ |
+--------------------------------+
```


Table 5 (continued)
Word Processing Adv. Video Module
ROM and Jumper Locations

VT100-WC-WK, WY & WZ 5413097-03

```
**************************************************************

+----------+--------------------+-+
|          |     J1             | |
|          +--------------------+ |
|                                |
|          +--+  <-- out         |
|          +--+                  |
|          +--+                  |
|          +--+                  |
|          +--+  <--  in         |
|          +W6+                  |
|          +--+                  |
|          +--+                  |
|          +--+  <-- out         |
|          +--+                  |
|                                |
|          +--+                  |
|          +--+  <-- out         |
|                                |
|          +--+  <-- out         |
|          +--+                  |
|                                |
| +-----+ +-----+ +-----+ +-----+ |
| | E19 | |BLANK| |BLANK| |BLANK| |
| | 23- | | | | | | | | | |
| |093E2| | | | | | | | | |
| | -00 | | | | | | | | | |
| +-----+ +-----+ +-----+ +-----+ |
+--------------------------------+
```